WL30-750BL18P

SPECIFICATIONS

GENERAL

Min. screen size*	50 inch
Max. screen size*	98 inch
Max. weight	100 kg (per screen)
Screens	1
VESA minimum	100x100 mm
VESA maximum	500x800 mm
Distance to wall	4,2 cm

FUNCTIONALITY

Type	Fixed
Height adjustment	1 cm
Lockable	Lockable - Padlock not included
Height	68,4 cm
Width	55 cm
Depth	4,2 cm
Adjustment type	Manual

INFORMATION

Series	LEVEL 750
Color	Black
Main material	Steel
Warranty	5 year
Certification	TÜV
EAN code	8717371443290

*Please note: The inch sizes stated are just an indication, combined with the weight and VESA sizes. The maximum weight and VESA size are absolute restrictions for the products and should not be exceeded.

NEOMOUNTS WL30-750BL18P HEAVY DUTY

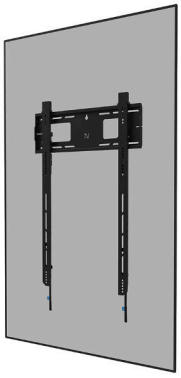

Neomounts

Neomounts

Neomounts LEVEL-750 WL30-750BL18P Fixed heavy duty wall mount - 50-98" screen - max 100 kg - VESA 100x100-500x800 - d 4,2 cm - level adjustment - lockable (excl. lock) - TÜV certified - Rapid Install-model with service position - portrait - black

The Neomounts WL30-750BL18P LEVEL is the ultimate solution for securely portrait mounting an interactive or heavy weight display up to 98" with a maximum capacity of 100 kg. This heavy-duty wall mount features a high profile wall plate and is engineered for stability and precision, ensuring your screen is securely mounted even on uneven surfaces. The wall mount is designed to provide the sturdiest and most stable touch screen experience. The brackets of the WL30-750BL18P feature depth adjustable wall supports on the lower brackets for better weight distribution and maximum stability. The mount features individual adjustable brackets (10 mm) for securely adjusting the display height or levelling it.

The LEVEL-750 wall mount has a profile depth of 4,2 cm and is suitable for screens that meet VESA hole pattern 100x100 to 500x800 mm. Its quickly connectable wall plate allows for multiple screen mounting, while a clever kickstand service position provides easy access to cables and connectors, ideal when mounting large displays in portrait. Additionally, the wall plate is designed with specific cut-outs for wall sockets and securing devices and cables. It features various perforated holes for easy tie-wrap cable fixing and provides space for cable storage, ensuring a clean and tidy finishing.

The WL30-750BL18P includes an safe and practical pull & release system, allowing you to quickly attach and detach the display in a safe and secure manner. It is possible to lock the brackets using a padlock (not included) for extra screen security.

For a simple and effective storage, an optionally available, AV-rack can be installed to the

Neomounts®

WL30-750BL18P **NEOMOUNTS WL30-750BL18P HEAVY DUTY**

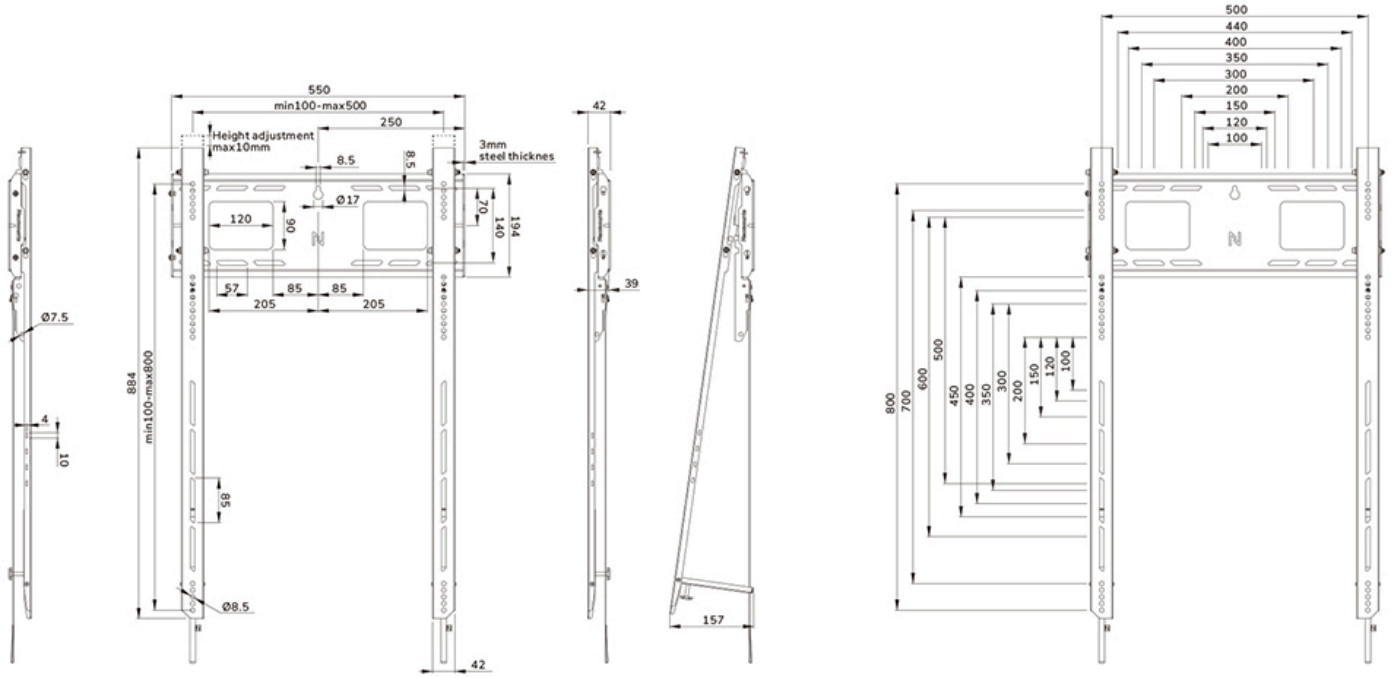

Neomounts

Measuring unit: mm