FL55-975BL1

NEOMOUNTS FL55-975BL1 TV TROLLEY 75-110"

SPECIFICATIONS

GENERAL

Min. screen size*	75 inch
Max. screen size*	110 inch
Max. weight	160 kg (per screen)
Screens	1
VESA minimum	200x200 mm
VESA maximum	1200x600 mm

FUNCTIONALITY

Type	Fixed
Height adjustment	119,2-184,2
Lockable	Lockable - Padlock not included
Height	215,4
Width	125,3
Depth	81,6
Adjustment type	Motorised

INFORMATION

Series	MOVE Lift XL
Color	Black
Main material	Steel
Warranty	5 year
EAN code	8717371449889

*Please note: The inch sizes stated are just an indication, combined with the weight and VESA sizes. The maximum weight and VESA size are absolute restrictions for the products and should not be exceeded.

Neomounts MOVE Lift XL FL55-975BL1 TV trolley - 75-110" - max 160 kg - motorised h 119,2-184,2 cm - VESA 200x200-1200x600 - lockable (excl. lock) - video bar kit optionally available - black

The Neomounts FL55-975BL1 MOVE Lift XL is the ideal motorised trolley for large displays up to 110" and 160 kg. The heavy-duty stand offers 65 cm of motorised height adjustment, allowing both seated and standing presentations at the perfect viewing height and raising the screen above the audience. Operation is smooth and precise via a conveniently positioned control panel. The anti-collision system ensures safe height adjustments, and the brackets can be locked with a padlock (not included) for extra security. An optional ventilated, lockable hardware compartment with a cable opening provides clean and secure equipment storage.

Designed for maximum mobility, the MOVE Lift XL features a large handlebar and heavy-duty 100 mm double-locking castor wheels for easy movement across any surface, including thresholds and carpet. The open wheelbase design allows easy access to (touch) displays and improves maneuverability around obstacles. A cable duct is included to route and conceal cables neatly from the floor stand to the screen. The MOVE Lift XL comes partially pre-assembled for quick, effortless installation.

A range of compatible accessory kits is available, including the AFL55-975BL VESA extension kit, a universal videobar kit, and a practical caster brake.

FL55-975BL1

NEOMOUNTS FL55-975BL1 TV TROLLEY 75-110"

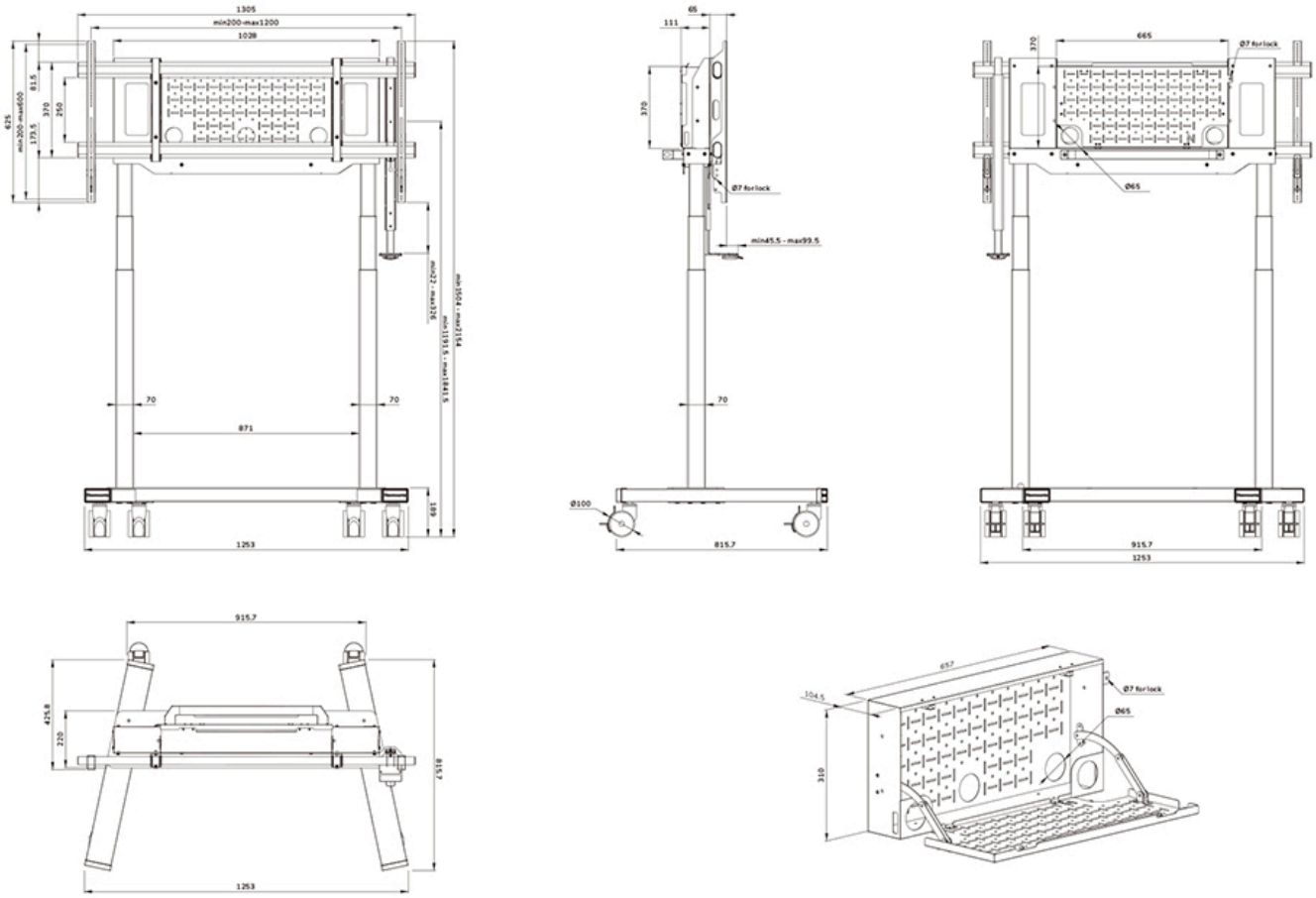

Neomounts

Measuring unit: mm