# ZT510

## Industrial Printer

# User Guide

ZEBRA

P1095460-07EN Rev A

2025/09/30

ZEBRA and the stylized Zebra head are trademarks of Zebra Technologies Corporation, registered in many jurisdictions worldwide. All other trademarks are the property of their respective owners. ©2025 Zebra Technologies Corporation and/or its affiliates. All rights reserved.

Information in this document is subject to change without notice. The software described in this document is furnished under a license agreement or nondisclosure agreement. The software may be used or copied only in accordance with the terms of those agreements.

For further information regarding legal and proprietary statements, please go to:

SOFTWARE: zebra.com/informationpolicy.
COPYRIGHTS: zebra.com/copyright.
PATENTS: ip.zebra.com.
WARRANTY: zebra.com/warranty.
END USER LICENSE AGREEMENT: zebra.com/eula.

# Terms of Use

## Proprietary Statement

This manual contains proprietary information of Zebra Technologies Corporation and its subsidiaries (“Zebra Technologies”). It is intended solely for the information and use of parties operating and maintaining the equipment described herein. Such proprietary information may not be used, reproduced, or disclosed to any other parties for any other purpose without the express, written permission of Zebra Technologies.

## Product Improvements

Continuous improvement of products is a policy of Zebra Technologies. All specifications and designs are subject to change without notice.

## Liability Disclaimer

Zebra Technologies takes steps to ensure that its published Engineering specifications and manuals are correct; however, errors do occur. Zebra Technologies reserves the right to correct any such errors and disclaims liability resulting therefrom.

## Limitation of Liability

In no event shall Zebra Technologies or anyone else involved in the creation, production, or delivery of the accompanying product (including hardware and software) be liable for any damages whatsoever (including, without limitation, consequential damages including loss of business profits, business interruption, or loss of business information) arising out of the use of, the results of use of, or inability to use such product, even if Zebra Technologies has been advised of the possibility of such damages. Some jurisdictions do not allow the exclusion or limitation of incidental or consequential damages, so the above limitation or exclusion may not apply to you.

# Contents

**Introduction** ..... **9**
Printer Components ..... 9
Printer Options ..... 10
Control Panel ..... 11
Navigating the Display Screens ..... 13
Navigating from the Idle Display ..... 13
Navigating the Home Menu ..... 13
Navigating the User Menus ..... 14
Menu Shortcuts ..... 15
Idle Display, Home Menu, and User Menus ..... 15
Home Menu ..... 16
Ribbon Overview ..... 16
When to Use Ribbon ..... 16
Coated Side of Ribbon ..... 17

**Printer Setup and Operation** ..... **19**
Handling the Printer ..... 19
Unpacking and Inspecting the Printer ..... 19
Storing the Printer ..... 19
Servicing the Printer ..... 20
Shipping the Printer ..... 20
Selecting a Location for the Printer ..... 21
Ordering Supplies and Accessories ..... 22
Media ..... 22
Ribbon ..... 22

Modifying or Viewing Secured Features....23
Connecting the Printer to a Device....23
Connect to a Phone or Tablet....23
Installing Drivers and Connecting to a Windows-Based Computer....24
Select a Print Mode....43
Load the Media....44
Inserting the Media into the Printer....44
Loading the Media - Tear-Off Mode....48
Loading the Media - Peel-Off Mode or Applicator Mode....53
Loading the Media - Rewind Mode....61
Loading the Media - Cutter Mode or Delayed Cut Mode....69
Loading the Ribbon....75
Adding a Printer through Zebra Setup Utilities....80
Printing a Test Label and Making Adjustments....89
Installing Label Design Software....93
ZebraDesigner System Requirements....93

**Printer Configuration and Adjustment....95**
Changing Printer Settings through the User Menus....95
DARKNESS....97
PRINT SPEED....97
MEDIA TYPE....98
PRINT METHOD....98
TEAR OFF....99
PRINT WIDTH....100
PRINT MODE....100
LABEL TOP....101
LEFT POSITION....102
REPRINT MODE....103
LABEL LENGTH MAX....103
PRINT INFORMATION....104
IDLE DISPLAY....109
POWER UP ACTION....109
HEAD CLOSE ACTION....110

LOAD DEFAULTS....111
MEDIA/RIBBON CAL....112
DIAGNOSTIC MODE....112
ENERGY STAR....113
CONFIG INFO TO USB....113
ZBI ENABLED?....114
RUN ZBI PROGRAM....114
STOP ZBI PROGRAM....115
PRINT USB FILE....115
COPY USB FILE TO E:....116
STORE E: FILE TO USB....117
PRINT STATION....117
PASSWORD PROTECT....118
PRINT TEST FORMAT....118
ACTIVE PRINT SERVER....119
PRIMARY NETWORK....120
WIRED IP ADDRESS....120
WIRED SUBNET MASK....121
WIRED GATEWAY....121
WIRED IP PROTOCOL....122
WIRED MAC ADDRESS....123
WLAN IP ADDRESS....123
WLAN SUBNET MASK....124
WLAN GATEWAY....124
WLAN IP PROTOCOL....125
WLAN MAC ADDRESS....126
ESSID....126
CHANNEL....127
SIGNAL....127
IP PORT....127
IP ALTERANTE PORT....128
RESET NETWORK....128
VISIBILITY AGENT....129
LANGUAGE....130

COMMAND LANGUAGE....130
COMMAND CHAR....131
CONTROL CHAR....131
DELIMITER CHAR....132
ZPL MODE....132
VIRTUAL DEVICE....133
SENSOR TYPE....133
LABEL SENSOR....134
TAKE LABEL....134
BAUD RATE....135
DATA BITS....135
PARITY....136
HOST HANDSHAKE....136
WML....137
BLUETOOTH ADDRESS....137
MODE....138
DISCOVERY....138
CONNECTED....139
BT SPEC VERSION....139
MIN SECURITY MODE....139
Calibrating the Ribbon and Media Sensors....140
Adjust the Printhead Pressure and Toggle Position....146
Adjusting the Toggle Position....147
Adjusting the Printhead Pressure....148
Adjusting the Transmissive Media Sensors....149
Removing Used Ribbon....152
Install the Rewind/Liner Take-Up Plate....154
Installing the Rewind/Liner Take-up Plate - Peel/Applicator Mode....154
Installing the Rewind/Liner Take-up Plate - Rewind Mode....156

**Routine Maintenance....158**
Cleaning Schedule and Procedures....158
Cleaning the Exterior, the Media Compartment, and the Sensors....159
Replacing Printer Components....173

Ordering Replacement Parts....173
Recycling Printer Components....173
Ordering Supplies....173
Lubrication....173

**Diagnostics and Troubleshooting....174**
Accessing a QuickHelp Page....174
Evaluating Barcode Quality....174
Printer Diagnostic Tests....176
Print Test Format Option....176
FEED Self Test....180
Communication Diagnostics Test....182
Sensor Profile....182
Meaning of Indicator Lights....185
Troubleshooting....186
Alerts and Error Messages....187
Printing Issues....191
Ribbon Issues....194
Printer Connectivity Issues....195
Communication Issues....196
Miscellaneous Issues....197

**Using a USB Host Port and the Print Touch Feature....200**
Items Required for the Exercises....200
Files for Completing the Exercises....201
USB Host....203
Exercise 1: Copy Files to a USB Flash Drive and Perform USB Mirror....203
Exercise 2: Print a Label Format from a USB Flash Drive....205
Exercise 3: Copy Files to/from a USB Flash Drive....205
Exercise 4: Enter Data for a Stored File with a USB Keyboard and Print a Label....206
Near Field Communication (NFC)....207
Exercise 5: Enter Data for a Stored File with a Smart Device and Print a Label....208

**Specifications.....210**
General Specifications.....210
Power Specifications.....214
Power Cord Specifications.....214
Communication Interface Specifications.....216
Wireless Specifications.....217
Printing Specifications.....218
Media Specifications.....219
Ribbon Specifications.....220

**Glossary.....221**

# Introduction

This section provides a high-level overview of the printer and its components.

## Printer Components

Some components in the illustrations in this manual are highlighted in color for emphasis or clarity.

This figure shows the components inside the media compartment of a standard printer. Depending on the printer model and the installed options, your printer may look slightly different. The components that are labeled are mentioned in procedures throughout this manual.

**Figure 1** Printer Components

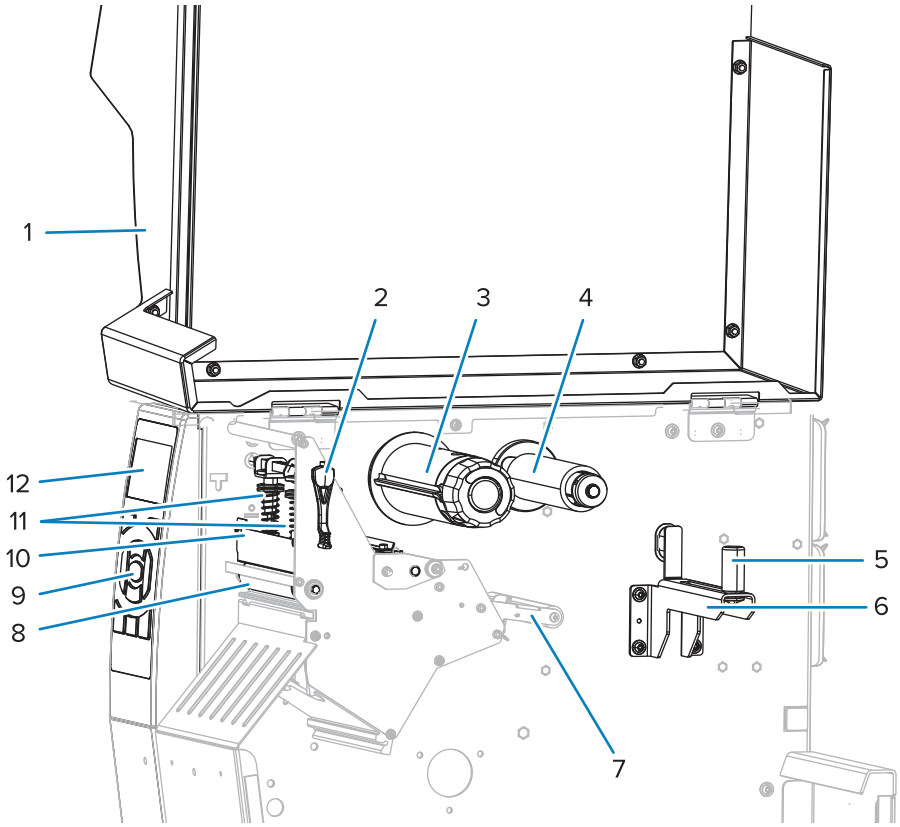

| | | | |
|---|---|---|---|
| 1 | Media door | 7 | Media dancer assembly |
| 2 | Printhead-open lever | 8 | Platen roller |
| 3 | Ribbon take-up spindle | 9 | Control panel |
| 4 | Ribbon supply spindle | 10 | Printhead assembly |
| 5 | Media supply guide | 11 | Printhead pressure toggles |
| 6 | Media supply spindle | 12 | Control panel display |

## Printer Options

The available printer options are shown.

For information about the print modes that can be used with the printer options, see Select a Print Mode on page 43.

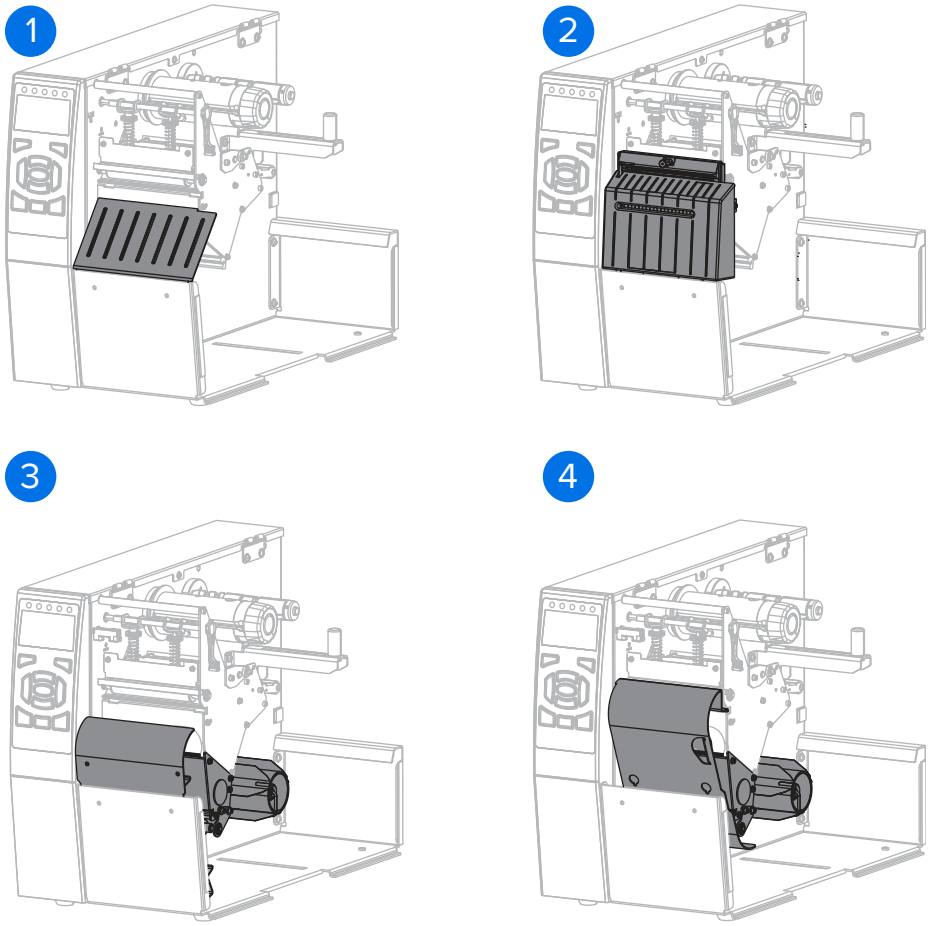


| | |
|---|---|
| 1 | Tear-Off (standard) |
| 2 | Cutter option |
| 3 | Rewind option set for Peel mode |

| | |
|---|---|
| 4 | Rewind option set for Rewind mode |

## Control Panel

The control panel indicates the printer's current status and allows you to control basic printer operation.

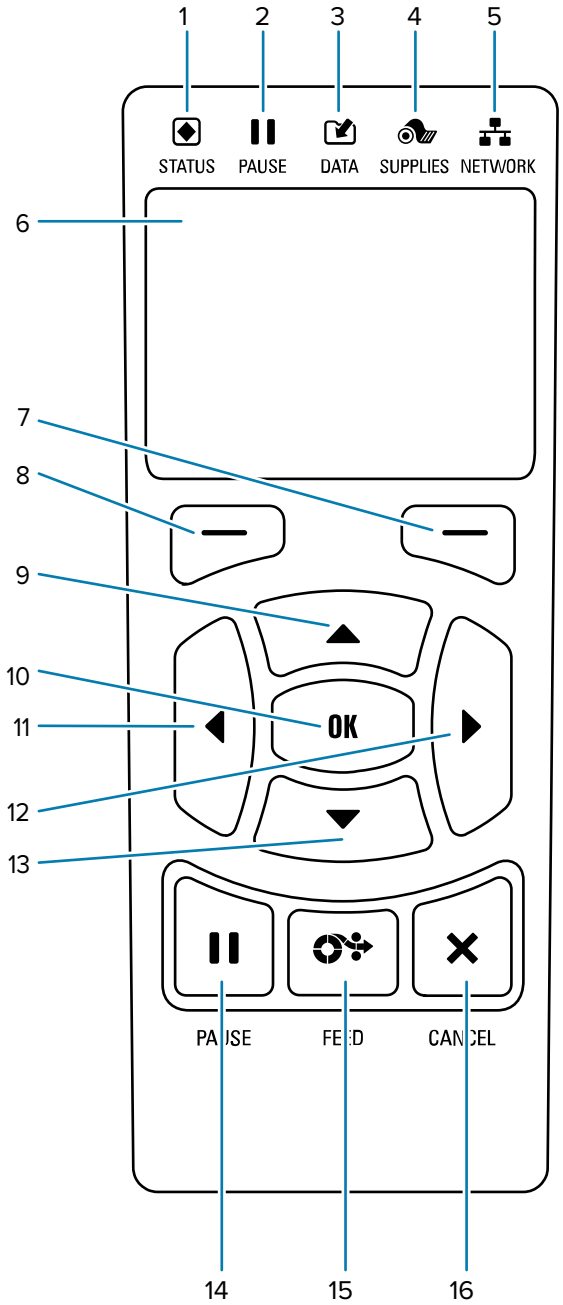


| | | |
|---|---|---|
| 1 | **STATUS** light | These indicator lights show the current status of the printer. For more information, see Table 1. |

| | | |
|---|---|---|
| 2 | **PAUSE** light | |
| 3 | **DATA** light | |
| 4 | **SUPPLIES** light | |
| 5 | **NETWORK** light | |
| 6 | The display shows the printer's current status and allows the user to navigate the menu system. | |
| 7 | **RIGHT SELECT** button | These buttons execute the commands shown directly above them in the display. |
| 8 | **LEFT SELECT** button | |
| 9 | The **UP ARROW** button changes the parameter values. This and other arrow buttons are commonly used to scroll through choices and adjust values. | |
| 10 | The **OK** button selects or confirms what is shown on the display. | |
| 11 | The **LEFT ARROW** button, which is active only in the menu system, navigates to the left. | |
| 12 | The **RIGHT ARROW** button, which is active only in the menu system, navigates to the right. | |
| 13 | The **DOWN ARROW** button changes the parameter values. Common uses are to decrease a value or to scroll through choices. | |
| 14 | The **PAUSE** button starts or stops printer operation when pressed. | |
| 15 | The **FEED** button forces the printer to feed one blank label each time the button is pressed. | |
| 16 | The **CANCEL** button cancels label formats when the printer is paused.<br>• Press once to cancel the next label format.<br>• Press and hold for 2 seconds to cancel all label formats. | |

# Navigating the Display Screens

The following topics detail how to navigate the display screens and select or modify the options shown.

## Navigating from the Idle Display

The Idle Display is the landing screen for the printer after its power-up sequence. From here, you can navigate through the menus and menu options.

- At the Idle Display, press **LEFT SELECT** to go to the printer's **Home** menu.

**Figure 2** Idle Display

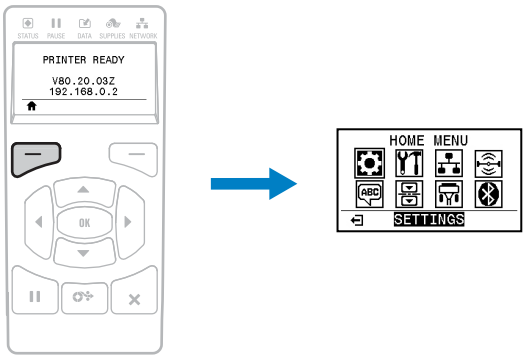


## Navigating the Home Menu

This section describes how to navigate the Home menu.

| | | |
|---|---|---|
| | | |
| To move from icon to icon in the Home menu, press any of the **ARROW** buttons. When an icon is selected, its colors are reversed to highlight it. | To select the highlighted menu icon and enter the menu, press **OK**. | Press **LEFT SELECT** to exit the Home menu and return to the Idle Display. The printer automatically returns to the |

| | | |
|---|---|---|
| SETTINGS menu icon<br> <br>SETTINGS menu icon highlighted<br> | | Idle Display after 15 seconds of inactivity in the Home menu. |

## Navigating the User Menus

This section describes how to navigate the User menus.

| | |
|---|---|
| <br>Press **LEFT SELECT** to return to the Home menu. The printer automatically returns to the Home menu after 15 seconds of inactivity in a user menu. | 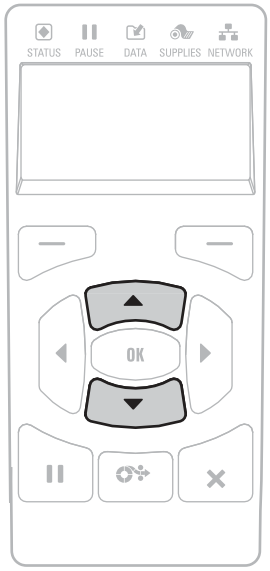 <br>▼ and ▲ indicate that a value can be changed. Any changes that you make are saved immediately. Press the **UP ARROW** or **DOWN ARROW** to scroll through accepted values. |
| 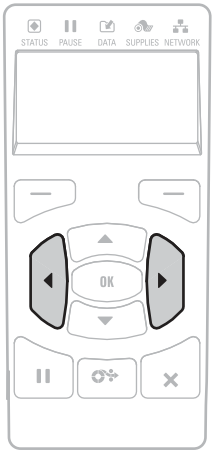 | |

| | |
|---|---|
| To scroll through the items in a user menu, press the **LEFT ARROW** or **RIGHT ARROW**. | A word in the bottom-right corner of the display indicates an available action.<br><br>Press **OK** or press **RIGHT SELECT** to perform the action shown. |

## Menu Shortcuts

This section displays menu shortcuts you can take to get to items quickly.

To go to the next user menu from a menu shortcut, press **OK** or press **RIGHT SELECT** to select **GO**.

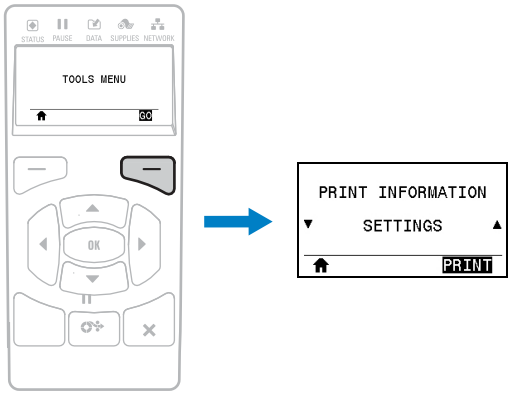


To continue to navigate in the same user menu, press the **LEFT ARROW** or **RIGHT ARROW**.

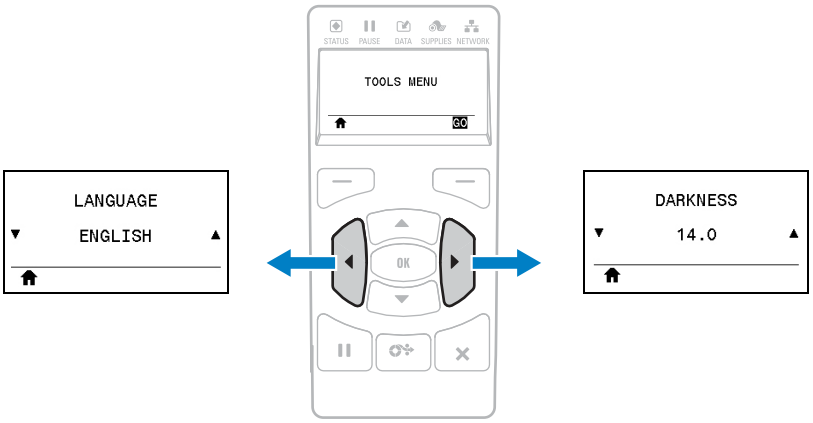


# Idle Display, Home Menu, and User Menus

The printer's control panel includes a display. The display gives you the ability to view the printer's status or change operating parameters. This section explains how to navigate through the printer's menus and change values for menu items.

After the printer completes the power-up sequence, it moves to the Idle Display. If a print server is installed, the printer cycles through its IP address and information configured by the user.

**Figure 3** Idle Display

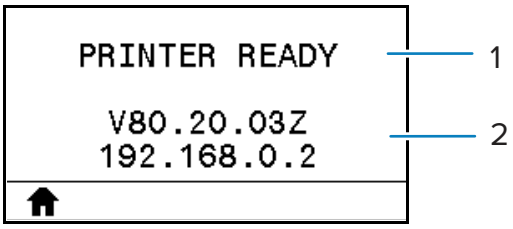


| | |
|---|---|
| 1 | The printer's current status |
| 2 | Information that you set through the TOOLS options in Changing Printer Settings through the User Menus on page 95. |
| | Home menu shortcut |

## Home Menu

Use the Home menu to access the printer's operating parameters through the user menus.

**Figure 4** Home Menu

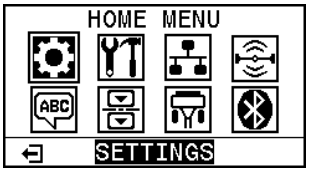


| | |
|---|---|
| | Exit and return to the Idle Display. |

# Ribbon Overview

Ribbon is a thin film that is coated on one side with wax, resin, or wax resin, which is transferred to the media during the thermal transfer process. The media determines whether you need to use ribbon and how wide the ribbon must be.

When ribbon is used, it must be as wide as or wider than the media being used. If the ribbon is narrower than the media, areas of the printhead are unprotected and subject to premature wear.

## When to Use Ribbon

Thermal transfer media requires ribbon for printing while direct thermal media does not. To determine if ribbon must be used with a particular media, perform a media scratch test.

### Scratch Test

1. Scratch the print surface of the media rapidly with your fingernail.

2. Did a black mark appear on the media?

| If a black mark... | Then the media is... |
|---|---|
| Does not appear on the media | Thermal transfer. A ribbon is required. |
| Appears on the media | Direct thermal. No ribbon is required. |

## Coated Side of Ribbon

Ribbon can be wound with the coated side on the inside or outside. This printer can only use ribbon that is coated on the outside. If you are unsure which side of a particular roll of ribbon is coated, perform an adhesive test or a ribbon scratch test to determine which side is coated.

| Ribbon Coated on the Outside | Ribbon Coated on the Inside |
|---|---|
| | |

### Adhesive Test

If you have labels available, perform the adhesive test to determine which side of a ribbon is coated. This method works well for ribbon that is already installed.

1. Peel a label from its liner.
2. Press a corner of the sticky side of the label to the outer surface of the roll of ribbon.
3. Peel the label off of the ribbon.
4. Observe the results. Did flakes or particles of ink from the ribbon adhere to the label?

| If ink from the ribbon... | Then... |
|---|---|
| Adhered to the label | The ribbon is coated on the outside and can be used in this printer. |
| Did not adhere to the label | The ribbon is coated on the inside and cannot be used in this printer. To verify this, repeat the test on the other surface of the roll of ribbon. |

### Ribbon Scratch Test

Perform the ribbon scratch test when labels are unavailable.

1. Unroll a short length of ribbon.
2. Place the unrolled section of ribbon on a piece of paper with the outer surface of the ribbon in contact with the paper.

3. Scratch the inner surface of the unrolled ribbon with your fingernail.
4. Lift the ribbon from the paper.
5. Observe the results. Did the ribbon leave a mark on the paper?

| If ink from the ribbon... | Then... |
|---|---|
| Left a mark on the paper | The ribbon is coated on the outside and can be used in this printer. |
| Did not leave a mark on the paper | The ribbon is coated on the inside and cannot be used in this printer. To verify this, repeat the test on the other surface of the roll of ribbon. |

# Printer Setup and Operation

This section assists the technician with initial setup and operation of the printer.

## Handling the Printer

This section describes how to handle your printer.

### Unpacking and Inspecting the Printer

Use a short description in a reference topic to briefly describe what the reference item does, what it is, or what it is used for.

When you receive the printer, immediately unpack it and inspect for shipping damage.

- Save all packing materials
- Check all exterior surfaces for damage.
- Raise the media door, and inspect the media compartment for damage to components.

If you discover shipping damage upon inspection:

- Immediately notify the shipping company and file a damage report.
- Keep all packaging material for shipping company inspection.
- Notify your authorized Zebra reseller.

**IMPORTANT:** Zebra Technologies is not responsible for any damage incurred during the shipment of the equipment and will not repair this damage under warranty.

### Storing the Printer

If you are not placing the printer into immediate operation, repackage it using the original packing materials. You may store the printer under the following conditions:

- Temperature: –40° to 60°C (–40°F to 140°F)
- Relative humidity: 5% to 85% non-condensing

## Servicing the Printer

If you have a problem using the printer, contact your facility's technical or systems support. If there is a problem with the printer, they will contact the Zebra Global Customer Support Center at zebra.com/support.

Gather the following information before contacting Zebra Global Customer Support:

- Serial number of the unit
- Model number or product name
- Firmware version number

Zebra responds to calls by e-mail, telephone, or fax within the time limits set forth in service agreements. If your problem cannot be solved by Zebra Global Customer Support, you may need to return your equipment for servicing and will be given specific directions.

If you purchased your product from a Zebra business partner, please contact that business partner for support.

## Shipping the Printer

If you must ship the printer:

1. Turn off (O) the printer, and disconnect all cables.
2. Remove any media, ribbon, or loose objects from the printer interior.
3. Close the printhead.
4. Carefully pack the printer into the original container or a suitable alternate container to avoid damage during transit. A shipping container can be purchased from Zebra if the original packaging has been lost or destroyed.

# Selecting a Location for the Printer

Select a location for the printer that meets these conditions:

- Surface: The surface where the printer will be located must be solid, level, and of sufficient size and strength to hold the printer.
- Space: The area where the printer will be located must include enough space for ventilation and for accessing the printer components and connectors. To allow for proper ventilation and cooling, leave open space on all sides of the printer.

**CAUTION:** Do not place any padding or cushioning material behind or under the printer because this restricts air flow and could cause the printer to overheat.

- Power: The printer should be within a short distance of an appropriate power outlet that is easily accessible.
- Data communication interfaces: The printer must be within range of your WLAN radio (if applicable) or within an acceptable range for other connectors to reach your data source (usually a computer). For more information on maximum cable lengths and configuration, see General Specifications on page 210.
- Operating conditions: Your printer is designed to function in a wide range of environmental and electrical conditions, including a warehouse or factory floor. These are the temperature and relative humidity requirements for the printer when it is operating.

**Table 1** Operating Temperature and Humidity

| Mode | Temperature | Relative Humidity |
|---|---|---|
| Thermal Transfer | 5° to 40°C (41° to 104°F) | 20 to 85% non-condensing |
| Direct Thermal | 0° to 40°C (32° to 104°F) | |

# Ordering Supplies and Accessories

You need to purchase certain supplies before you set up your printer, and you may choose to purchase accessories for the printer.

The following things that you will need do NOT come with the printer:

- Communication/network cables (such as serial or wired Ethernet) other than USB
- Media
- Ribbon (if your printer has a thermal transfer option)

For recommended supplies to ensure optimal operation of your printer, go to zebra.com/supplies.

## Media

The type and size of media that you choose should be appropriate for the options installed on the printer.

Refer to the media specifications for the printer for minimum label lengths and other important things to consider.

For optimal printing quality and proper printer performance across the product lines, Zebra strongly recommends the use of Zebra Certified Supplies as part of the total solution. A wide range of paper, polypropylene, polyester, and vinyl stock has been specifically engineered to enhance the printing capabilities of the printer and to prevent premature printhead wear. To purchase supplies, go to zebra.com/supplies.

The Glossary includes terms associated with media, such as black mark media, gap/notch media, fanfold media, and roll media. Use these terms to help determine which type of media will suit your needs.

## Ribbon

This section applies only to printers that have the Thermal Transfer option installed.

| | |
|---|---|
| Do I need to use ribbon? | The media itself determines if you will need to use ribbon.<br>• Thermal Transfer media—Requires ribbon.<br>• Direct Thermal media—Does NOT require ribbon. |
| How can I tell if media is Direct Thermal or Thermal Transfer?<br>(See direct thermal on page 222 and thermal transfer on page 229 for definitions.) | The easiest way to find out is to scratch the surface of the media rapidly with your fingernail. If a black mark appears where you scratched, the media is Direct Thermal, so you do NOT need ribbon. |
| What kind of ribbon can I use? | This printer can use ONLY ribbon coated on the outside, unless you purchase and install the optional spindle that allows the use of ribbon coated on the inside. Contact your authorized Zebra reseller for ordering information. |
| How can I tell which side of the ribbon is coated? | Use one of these two methods to determine which side of the ribbon is coated:<br>• Performing an Adhesive Test.<br>• Performing a Ribbon Scratch Test. |

# Modifying or Viewing Secured Features

Some features may be locked either by default or by choice, and you need to perform certain tasks before they can be viewed or modified.

**EU RED**

If you purchased your printer within European, Middle Eastern, or African (EMEA) countries on or after August 1, 2025, the printer comes with specific security features to meet the EU Radio Equipment Directive (RED) requirements. As part of the setup process, you must do the following before you can access the control panel parameters or modify certain settings using commands:

- set a Protected Mode password and configure Protected Mode
- set a front panel password/PIN to view the control panel parameters

For more information, go to zebra.com/asr or refer to the Zebra Link-OS PrintSecure Printer Administration Guide.

**Protected Mode**

For printers that already have Protected Mode set up, you need to enter the Protected Mode (admin) password to change certain settings on the printer. For more information, refer to the Zebra Link-OS PrintSecure Printer Administration Guide.

**Front Panel Password/PIN**

The front panel display can be locked, limiting access to the control panel parameters until the front panel password is entered. This value is initially undefined and must be set before it can be used.

For more information about the front panel password, refer to the Zebra Link-OS PrintSecure Printer Administration Guide.

# Connecting the Printer to a Device

After you have set up the printer, you are ready to connect the printer to your device (such as a computer, phone, or tablet).

**NOTE:** If you purchased your printer in the EMEA region on or after August 1, 2025, go to Modifying or Viewing Secured Features on page 23.

## Connect to a Phone or Tablet

Download the free Zebra Printer Setup Utility app for your device.

- Android devices
- Apple devices

The applications support the following types of connectivity:

- Bluetooth Classic
- Bluetooth Low Energy (Bluetooth LE)
- Wired/Ethernet
- Wireless
- USB On-The-Go

For the User Guides for these printer setup utilities, go to zebra.com/setup.

## Installing Drivers and Connecting to a Windows-Based Computer

To use your printer with a Microsoft Windows-Based computer, you must install the correct drivers first.

**IMPORTANT:** You may connect your printer to your computer using any of the connections that you have available. However, do not connect any cables from your computer to the printer until you are instructed to do so. If you connect them at the wrong time, your printer will not install the correct printer drivers. To recover from incorrect driver installation, see What to Do If You Forget to Install Printer Drivers First on page 36.

### Installing the Drivers

1. Navigate to zebra.com/drivers.
2. Click **Printers**.
3. Select your printer model.
4. On the printer product page, click **Drivers**.
5. Download the appropriate driver for Windows.

   The driver executable file (such as `zd86423827-certified.exe`) is added to your Download folder.
6. Run the executable file and follow the prompts.

   When the printer setup is complete, you may select to add the drivers to your system (Configure System) or to add specific printers, see Running the Printer Installation Wizard on page 26.
7. Select **Configure System**, and then click **Finish**.

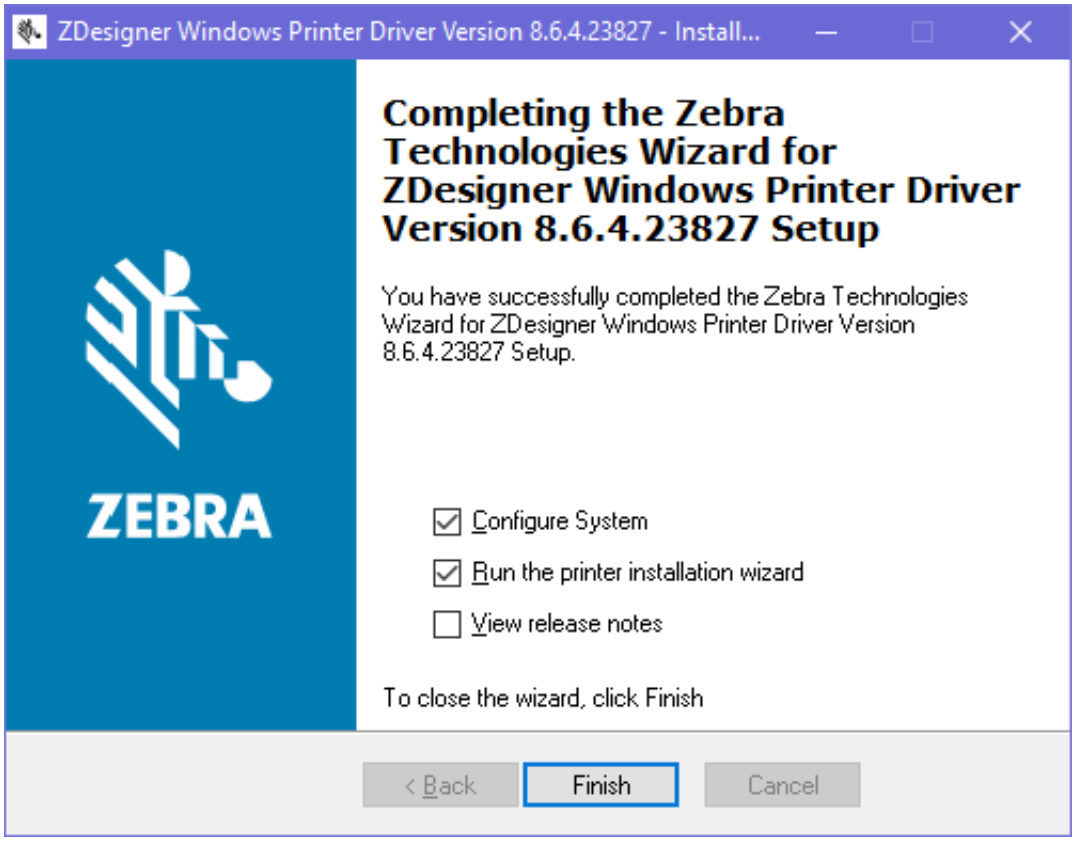

The **Printer Installation Wizard** installs the drivers.

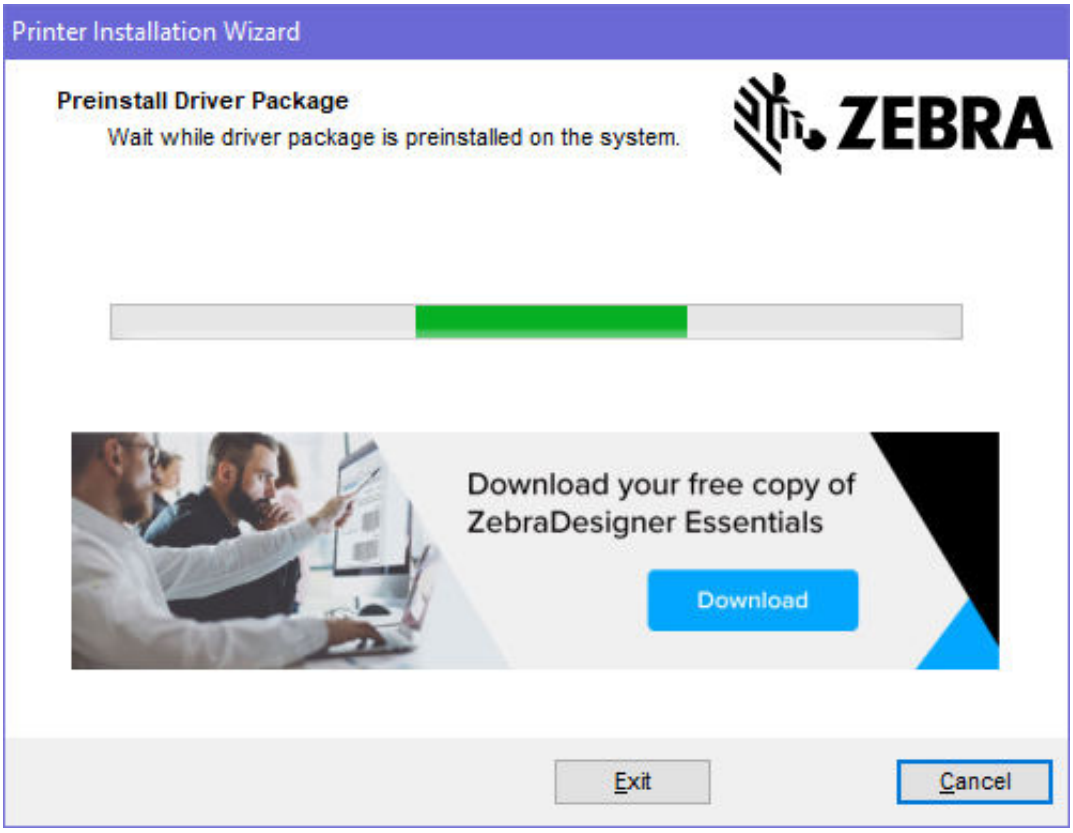

## Running the Printer Installation Wizard

1. On the last screen of the driver installer, leave Run the Printer Installation Wizard checked, and then click **Finish**.

   The printer driver wizard displays.

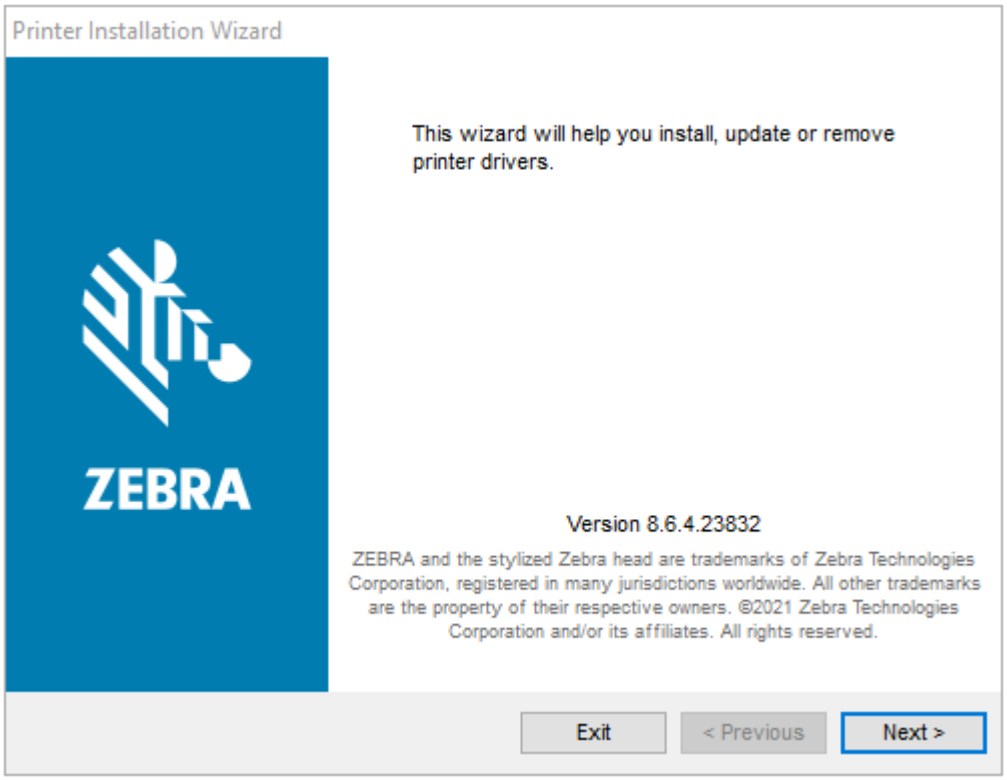

2. Click **Next**.

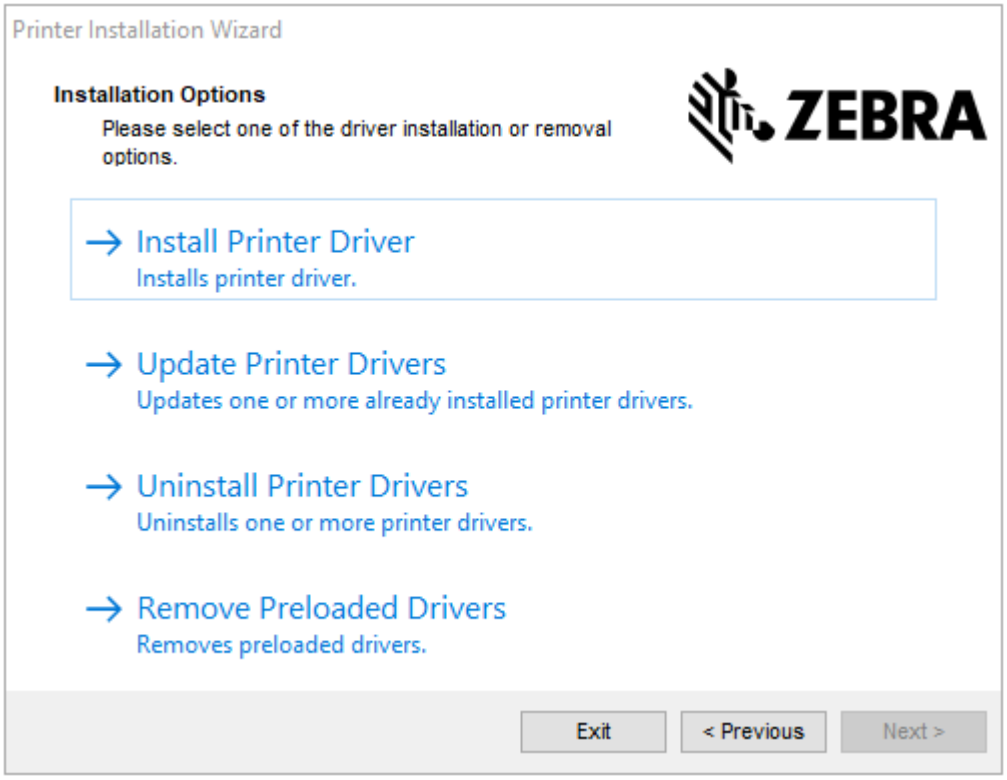
Printer Installation Wizard
Installation Options
Please select one of the driver installation or removal options.
ZEBRA
Install Printer Driver
Installs printer driver.
Update Printer Drivers
Updates one or more already installed printer drivers.
Uninstall Printer Drivers
Uninstalls one or more printer drivers.
Remove Preloaded Drivers
Removes preloaded drivers.
Exit
< Previous
Next >

3. Click **Install Printer Driver**.

   The license agreement displays.

4. Read and accept the terms of the license agreement, and then click **Next**.

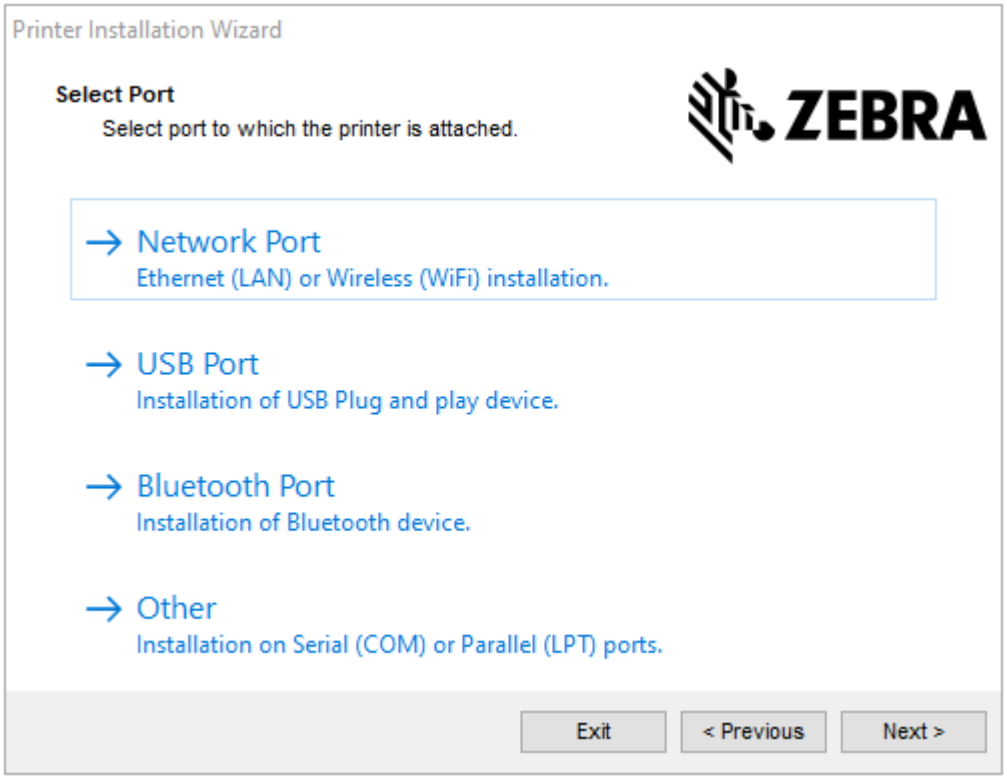


5. Select the communication option that you want to configure for your printer:
   - Network Port: For installing printers with an Ethernet (LAN) or wireless (Wi-Fi) network connection. Wait for the driver to scan your local network for devices and follow the prompts. If necessary, set the values as directed in Connecting to Your Network through the Printer's Ethernet Port on page 31 or Connecting the Printer to Your Wireless Network on page 35.
   - USB Port: For installing printers connected with the USB cable. Connect the printer to the computer as shown in Connecting to a Computer Using the Printer's USB Port on page 30. If the printer is already connected and powered on, you may need to remove the USB cable and install it again. The driver will automatically search for the model of the connected printer.
   - Bluetooth Port: For installing printers with a Bluetooth connection. Not applicable for this printer.
   - Other: For installation on another type of cable, such as Parallel (LPT) and Serial (COM). No additional configuration is necessary.
6. If prompted, select your printer model and resolution.

   The model and resolution are on a part number sticker on the printer, usually located below the media hanger. The information will be in the following format:

   Part Number: XXXXXxY – xxxxxxxx

   where

   XXXXX = the printer model

   Y = the printer resolution (2 = 203 dpi, 3 = 300 dpi, 6 = 600 dpi)

   For example, in the part number ZT510x3 – xxxxxxxx, ZT510 indicates that the printer is a ZT510 model 3 indicates that the printhead resolution is 300 dpi.

## Connecting to a Computer Using the Printer's USB Port

1. After you install the drivers, remove the label that covers the USB port.

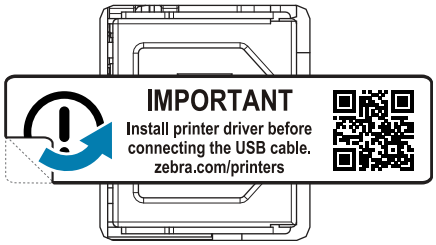


2. Connect one end of the USB cord to the USB port on your printer and the other end to your computer.

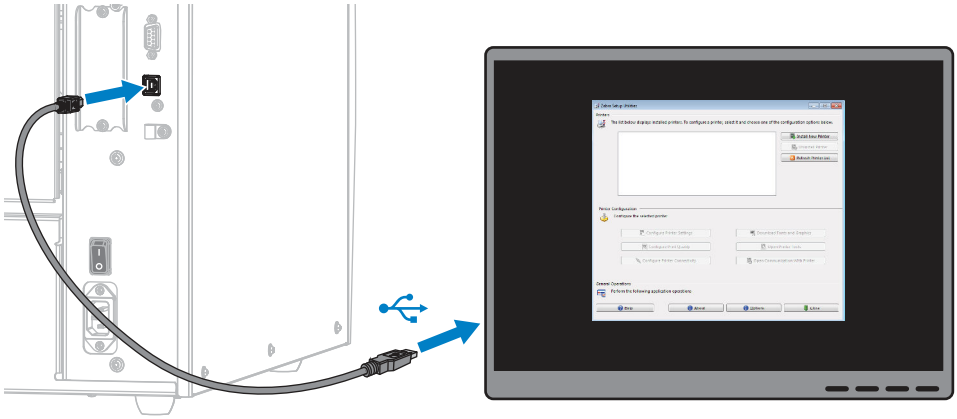

3. Plug the A/C power cord into the A/C power connector on the back of the printer.

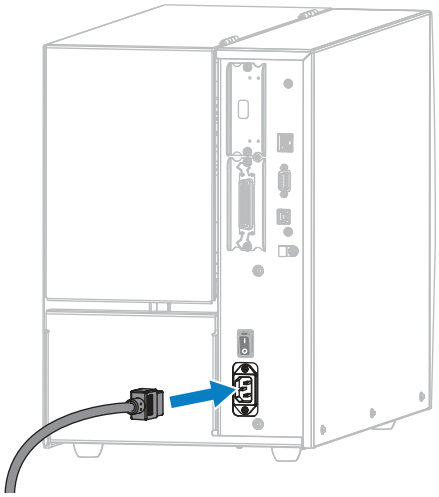

4. Plug the A/C power cord into an appropriate power outlet.

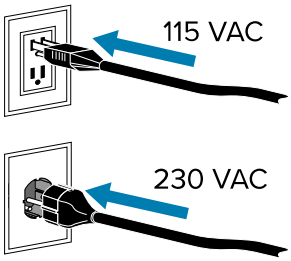


5. Turn on (I) the printer.

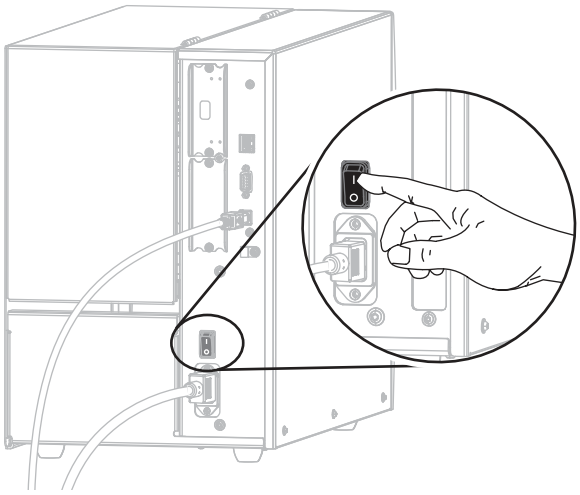

As the printer boots up, your computer completes the driver installation and recognizes your printer.

If you did not install the drivers first, see What to Do If You Forget to Install Printer Drivers First on page 36.

## Connecting to Your Network through the Printer's Ethernet Port

If you wish to use a wired print server (Ethernet) connection, you may need to connect the printer to your computer using one of the other available connections. While the printer is connected via one of those connections, you would configure the printer to communicate with your Local Area Network (LAN) through the printer's wired print server.

**NOTE:** For printers purchased in the EMEA region after August 1, 2025, you must configure a Protected Mode password and front panel password for the printer before you can perform wired or wireless setup. For additional information, go to zebra.com/asr or refer to the Zebra Link-OS PrintSecure Printer Administration Guide.

For other printers with Protected Mode enabled, depending on the configuration, you may need to enter the Protected Mode password to change certain settings on the printer. For more information, refer to the Zebra Link-OS PrintSecure Printer Administration Guide.

1. Install the drivers as instructed in Installing Drivers and Connecting to a Windows-Based Computer on page 24.

2. Plug the A/C power cord into the A/C power connector on the back of the printer.

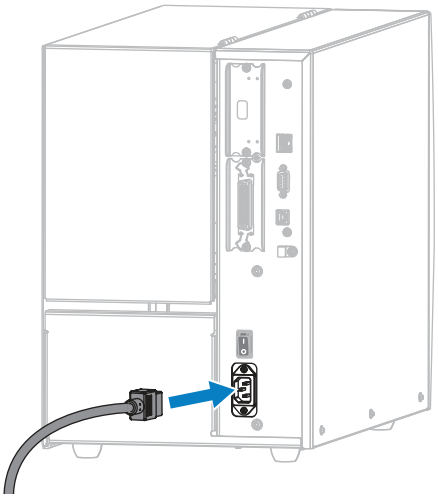

3. Plug the end of the A/C power cord into an appropriate power outlet.

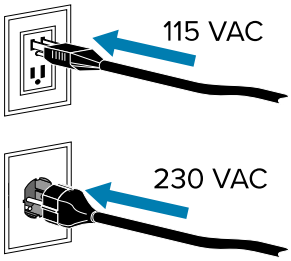


4. Turn on (I) the printer.

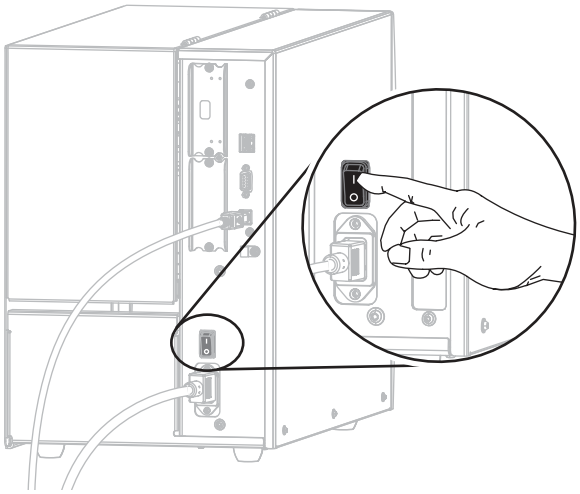

The printer boots up.

**5.** Connect the printer to an Ethernet cable that is connected to your network.

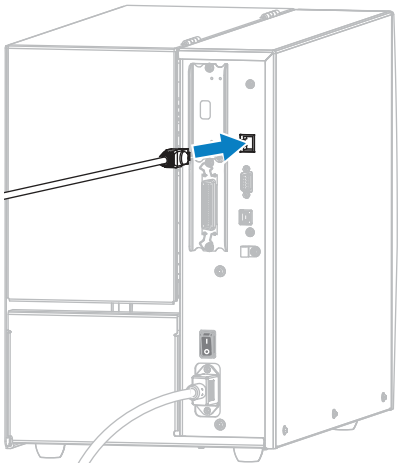

The printer attempts to communicate with your network. If it is successful, it fills in your LAN's gateway and subnet values and gets an IP address. The printer display will alternate between the printer's firmware version and its IP address.

6. On the Home screen, touch the Printer Info tab. Check the display to see if an IP address was assigned to the printer. See WIRED IP ADDRESS on page 120.

| If the printer's IP address is... | Then... |
|---|---|
| `0.0.0.0`<br>or<br>`000.000.000.000` | The NETWORK light is off or displays steady red. (See Meaning of Indicator Lights for more information.)<br>**a.** Check the Ethernet connector on the back of the printer. If no light is on or blinking, the Ethernet connection is not active. Check that both ends of the cord are plugged in correctly and that the network port that you are plugging into is active. When this issue is resolved, the printer should connect automatically.<br>**b.** If necessary, configure the following printer settings to set a static IP address and then reset the network. Contact your network administrator for the proper values for your network.<br>• WIRED IP PROTOCOL on page 122 (change the value from ALL to PERMANENT)<br>• WIRED GATEWAY on page 121 (match the gateway value of your LAN)<br>• WIRED SUBNET MASK on page 121 (match the subnet value of your LAN)<br>• WIRED IP ADDRESS on page 120 (assign a unique IP address to the printer)<br>• WLAN IP PROTOCOL on page 125 (change the value from ALL to PERMANENT)<br>• WLAN GATEWAY on page 124 (match the gateway value of your LAN)<br>• WLAN SUBNET MASK on page 124 (match the subnet value of your LAN)<br>• WLAN IP ADDRESS on page 123 (assign a unique IP address to the printer) |
| any other value | The connection was successful. The NETWORK light displays steady green or yellow, depending on the network. (See Meaning of Indicator Lights for more information.) |

7. After the print server settings have been configured, reset the network to apply the changes. See RESET NETWORK on page 128.

## Connecting the Printer to Your Wireless Network

If you wish to use the printer's optional wireless print server, you must first connect the printer to your computer using one of the other available connections. While the printer is connected via one of those connections, you configure the printer to communicate with your Wireless Local Area Network (WLAN) through the wireless print server.

**NOTE:** For printers purchased in the EMEA region after August 1, 2025, you must configure a Protected Mode password and front panel password for the printer before you can perform wired or wireless setup. For additional information, go to zebra.com/asr or refer to the Zebra Link-OS PrintSecure Printer Administration Guide.

For other printers with Protected Mode enabled, depending on the configuration, you may need to enter the Protected Mode password to change certain settings on the printer. For more information, refer to the Zebra Link-OS PrintSecure Printer Administration Guide.

For additional information about Zebra print servers, refer to the ZebraNet Wired and Wireless Print Server User Guide. To download the latest version of this guide, go to zebra.com/manuals.

For more information on this server, see the ZebraNet Wired and Wireless Print Server User Guide. You can download the latest version of this guide from zebra.com/manuals.

1. Install the drivers as instructed in Installing Drivers and Connecting to a Windows-Based Computer on page 24.
2. If necessary, specify the ESSID value that matches the value used by your wireless router. Check with your network administrator for the ESSID value to use. See ESSID on page 126 for ways to change the value.
3. If necessary, configure the following printer settings. Contact your network administrator for the proper values for your network.
   - WLAN GATEWAY on page 124 (match the gateway value of your WLAN)
   - WLAN SUBNET MASK on page 124 (match the subnet value of your WLAN)
4. Reset the network to allow changes to the network settings to take effect. See RESET NETWORK on page 128.
5. If the printer still does not connect, consider setting a static IP address by configuring the following additional settings, and then reset the network again. Contact your network administrator for the proper values for your network.
   - WLAN IP PROTOCOL on page 125 (change the value from ALL to PERMANENT)
   - WLAN IP ADDRESS on page 123 (assign a unique IP address to the printer)

## What to Do If You Forget to Install Printer Drivers First

If you plug in your Zebra printer before installing the drivers, the printer displays as an Unspecified device.

1. Follow the instructions in Installing the Drivers on page 24 to download and install the drivers.
2. From the **Windows** menu, open the **Control Panel**.
3. Click **Devices and Printers**.

   In this example, the ZTC ZT320-203dpi ZPL is an incorrectly installed Zebra printer.

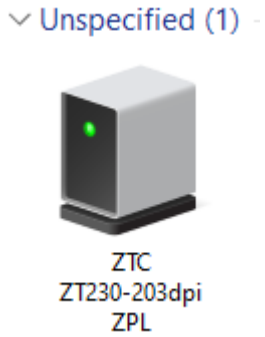

**4.** Right-click on the device, and select **Properties**.

The properties for the device display.

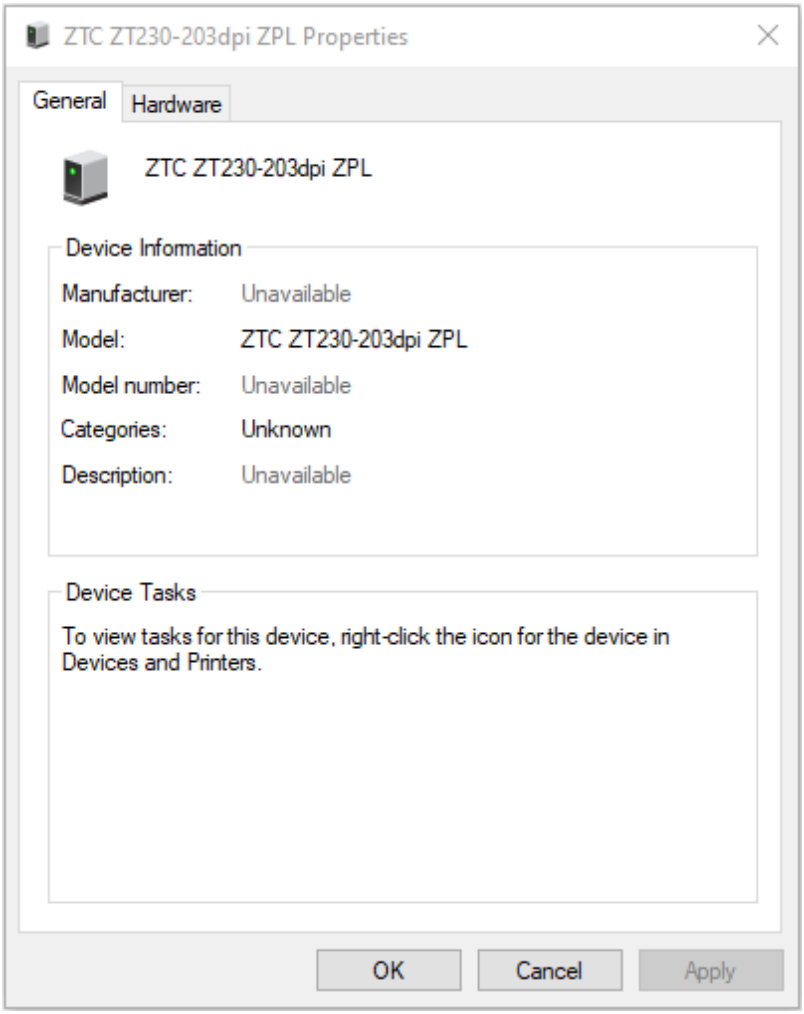

**5.** Click the **Hardware** tab.

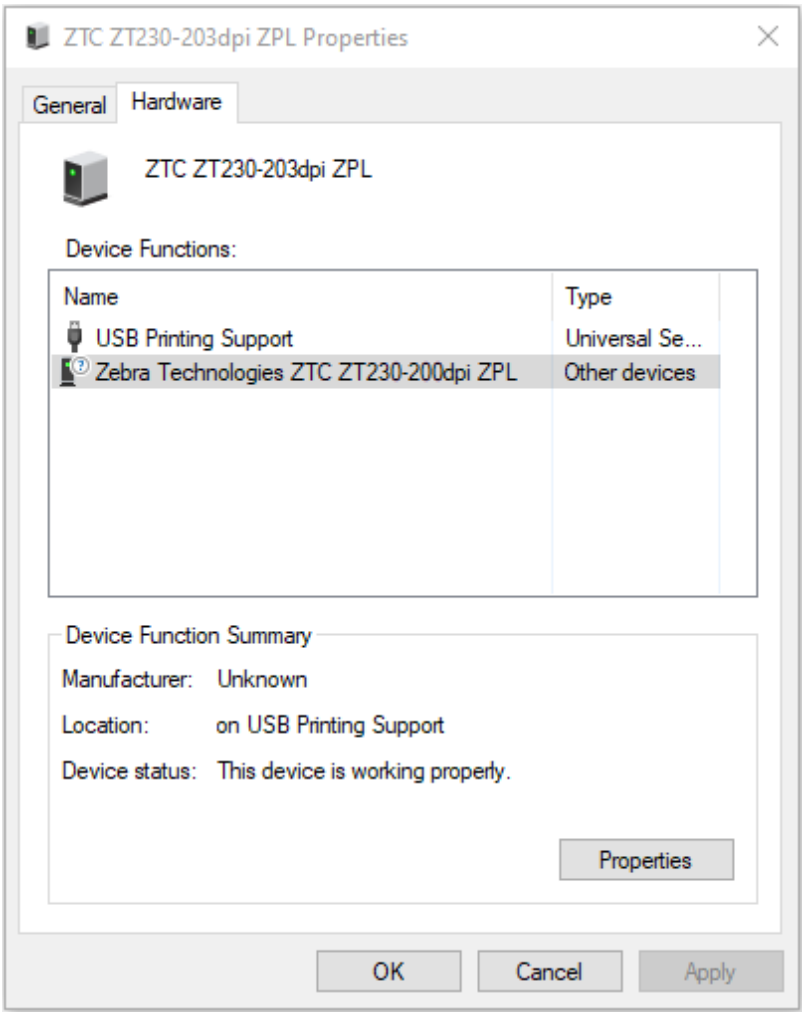

6. Select the Zebra printer in the **Device Functions** list, and then click **Properties**.

   The properties display.

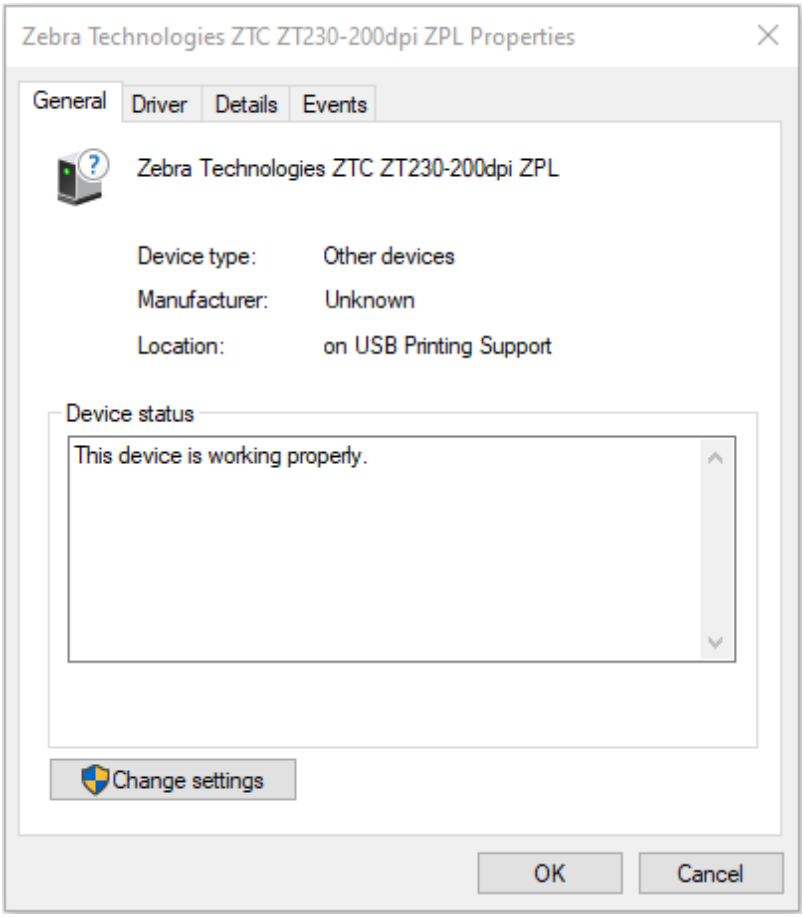

7. Click **Change settings** and then click the **Driver** tab.

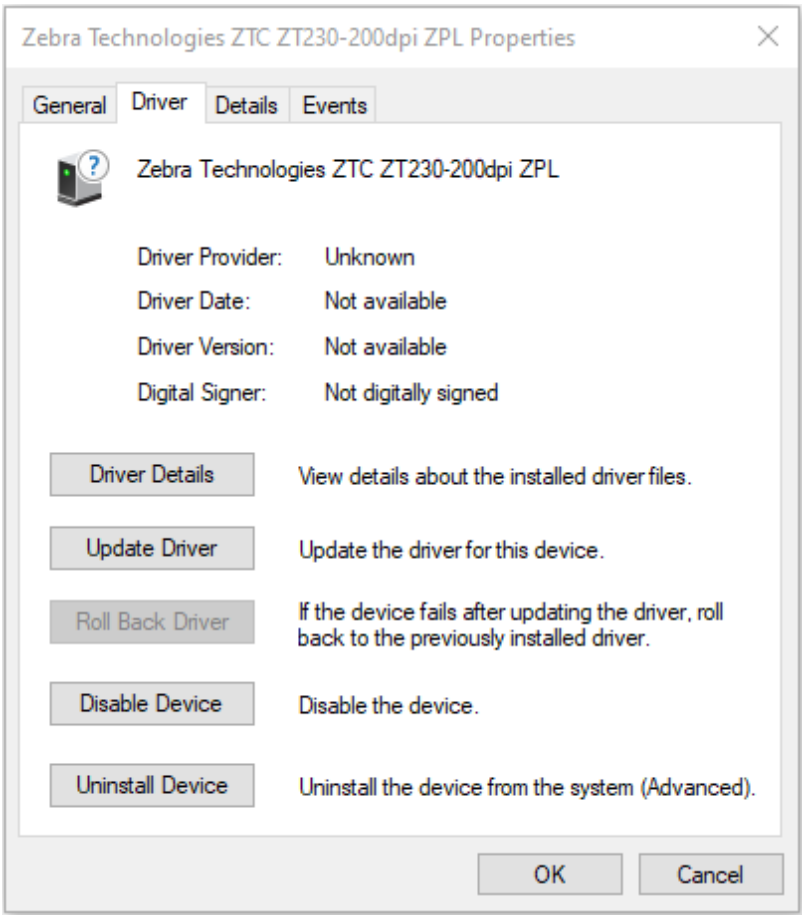

8. Click **Update Driver**.

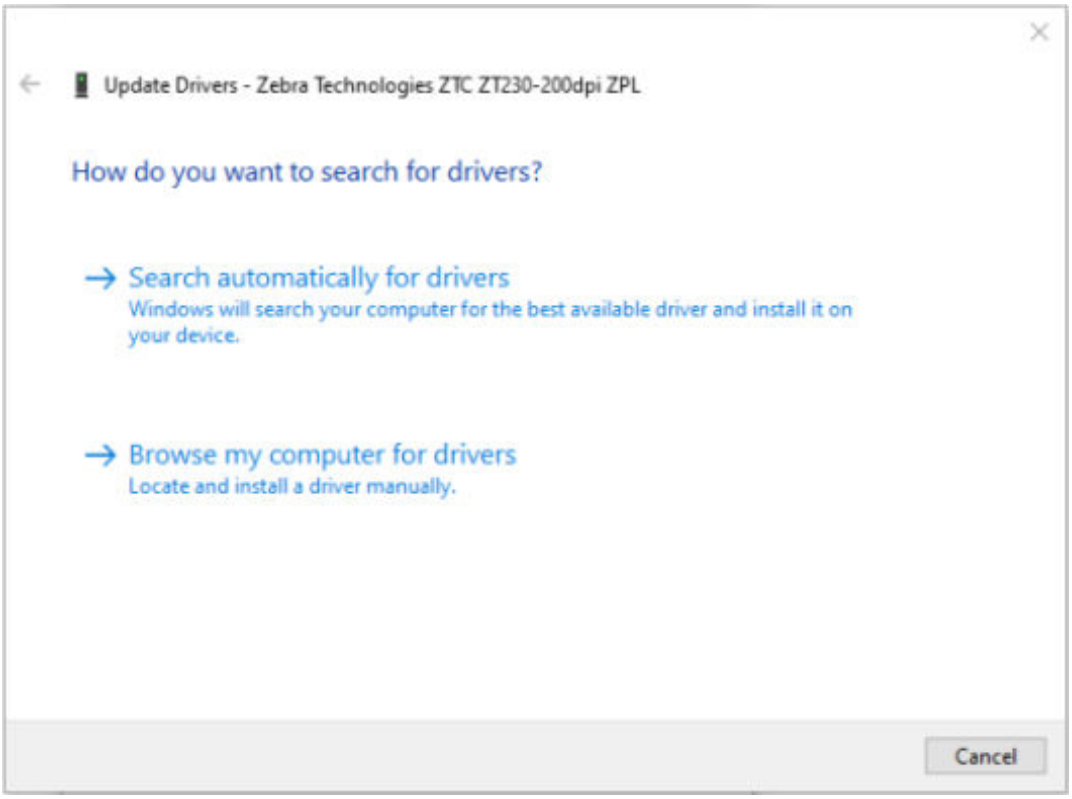


9. Click **Browse my computer for driver software**.
10. Click **Browse...** and navigate to the **Downloads** folder.

**11.** Click **OK** to select the folder.

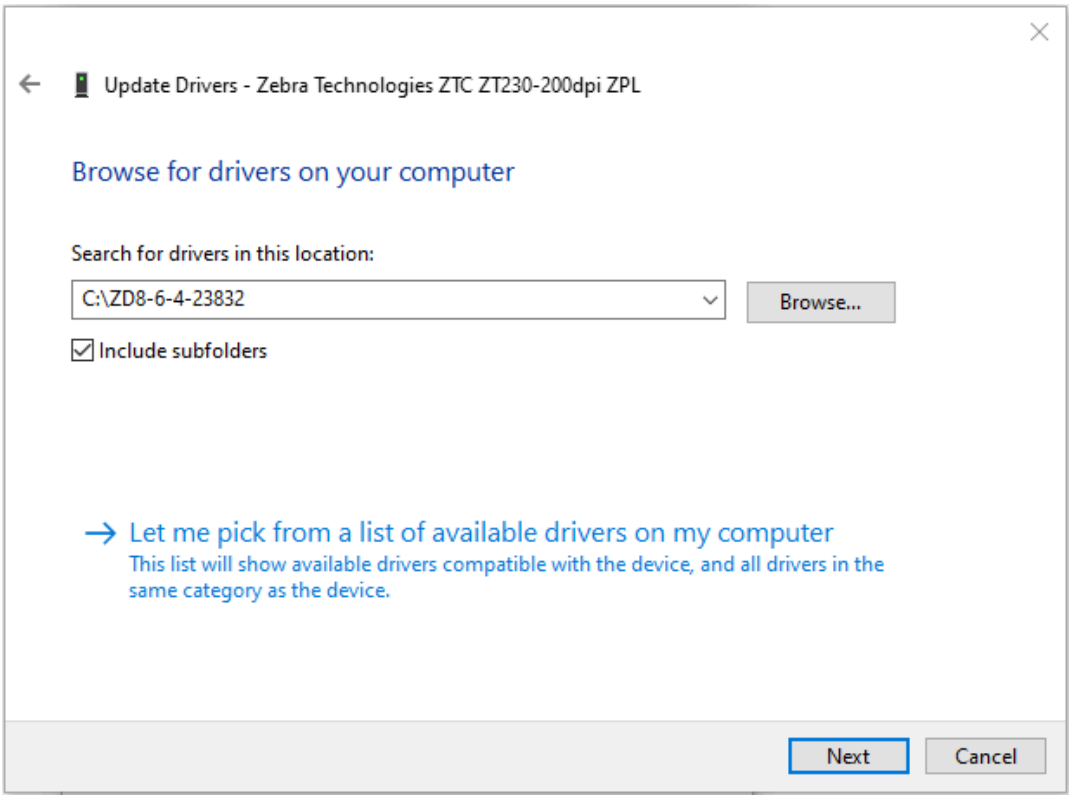


**12.** Click **Next**.

The device is updated with the correct drivers.

# Select a Print Mode

Use a print mode that matches the media being used and the printer options available. The media path is the same for roll and fanfold media.

To set the printer to use an available print mode, see PRINT MODE on page 100.

**Table 2** Print Modes and Printer Options

| Print Mode | Description |
|---|---|
| TEAR OFF | This mode (default) can be used with any printer options and most media types.<br>The printer prints label formats as it receives them. The printer operator can tear off the printed labels any time after they print. |
| PEEL-OFF | This mode can be used if the printer has a rewind option.<br>The printer peels the label from the liner during printing and then pauses until the label is removed. The backing is wound on the rewind spindle without using the rewind plate. |
| REWIND | This mode can be used only if the printer has a rewind option.<br>The printer prints without pausing between labels. The media is wound onto a core after printing. The rewind plate is used to keep the labels from separating from the backing. |
| CUTTER | This mode can be used only if the printer has a cutter option.<br>The printer cuts between labels after each one is printed. |
| DELAYED CUT | This mode can be used only if the printer has a cutter option.<br>The printer waits for a delayed cut ZPL command (~JK) before it cuts the last printed label. |
| LINERLESS PEEL* | * Reserved for future use. |
| LINERLESS REWIND* | |
| LINERLESS TEAR* | |
| APPLICATOR | This mode is for use with a machine that applies labels.<br>The printer prints when it receives a signal from the applicator. Refer to the Advanced User Information section of the Maintenance Manual for additional information about the applicator interface. |

# Load the Media

Use the instructions in this section for loading roll or fanfold media in the appropriate print mode for your needs.

**CAUTION:** While performing any tasks near an open printhead, remove all rings, watches, hanging necklaces, identification badges, or other metallic objects that could touch the printhead. You are not required to turn off the printer power when working near an open printhead, but Zebra recommends it as a precaution. If you turn off the power, you will lose all temporary settings, such as label formats, and you must reload them before you resume printing.

## Inserting the Media into the Printer

The majority of the illustrations in this section show roll media because the media loading path is the same for both roll and fanfold media.

1. Raise the media door.

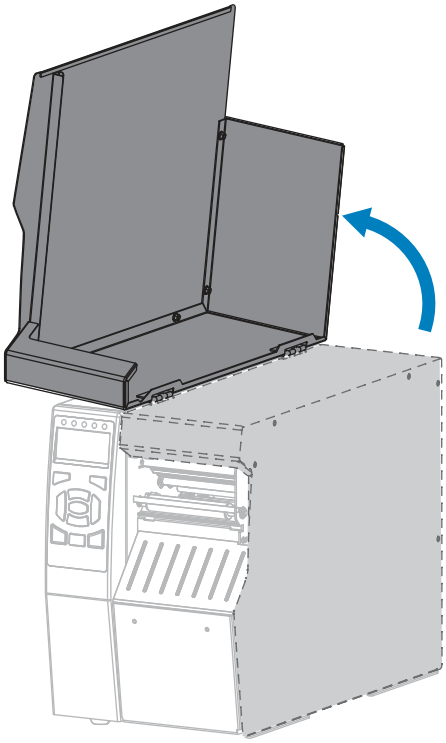

**2.** Remove and discard any tags or labels that are torn or dirty or that are held by adhesives or tape.

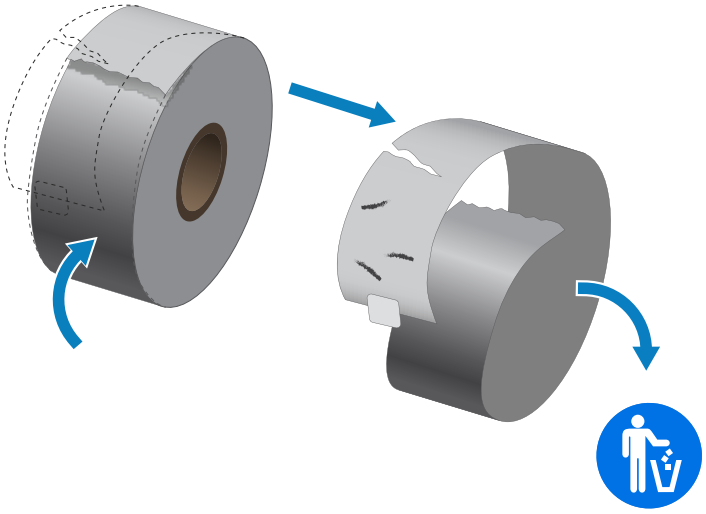

**3.** Insert roll or fanfold media into the printer.

| Roll Media | Fanfold Media |
|---|---|
| a. Pull out the media supply guide as far as it goes.<br> 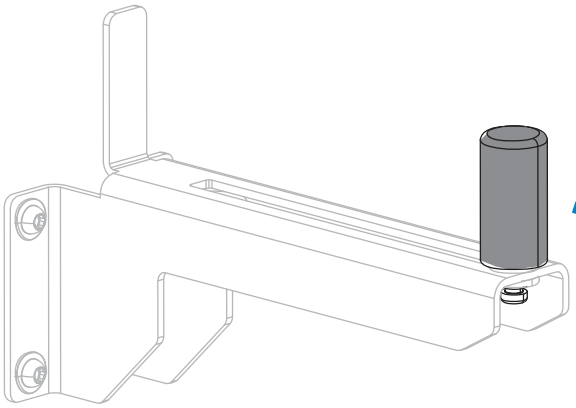 | a. Fanfold media can be stored behind or under the printer. Depending on where the media is stored, feed the media from behind or through the bottom access slot.<br>Rear Feed<br> 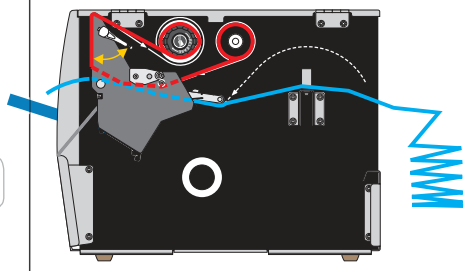 <br>Bottom Feed<br> 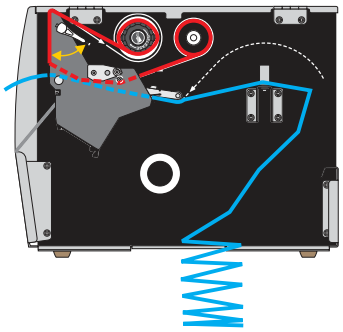 |
| b. Place the roll of media on the media supply hanger. Push the roll back as far as it will go. | b. Pull out the media supply guide as far as it goes. |

| Roll Media | Fanfold Media |
|---|---|
| 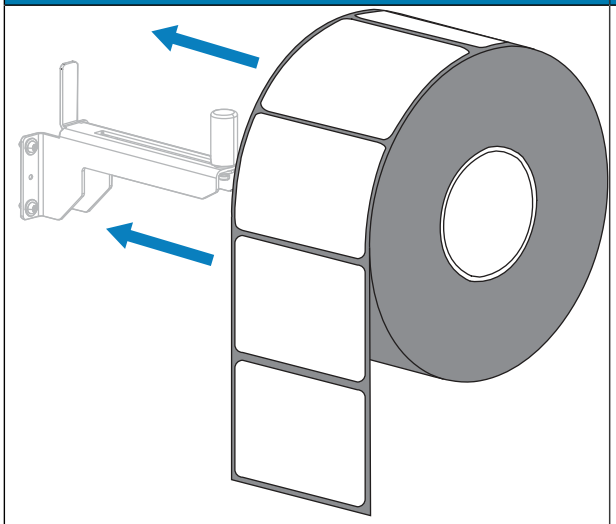 | 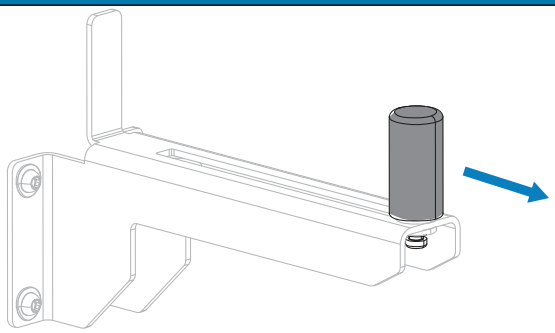 |
| c. Slide in the media supply guide until it touches the edge of the roll. 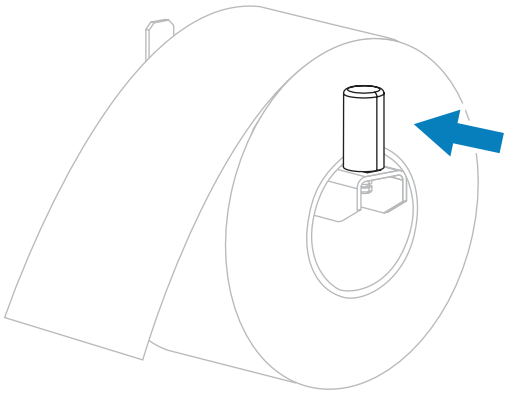 | c. Drape the media over the media supply hanger. 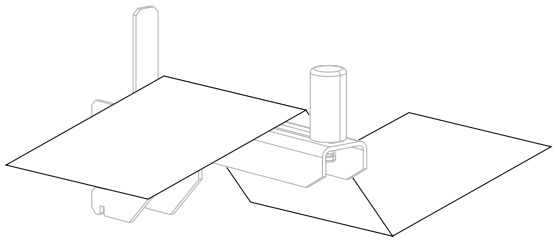 |
| | d. Slide in the media supply guide until it touches the edge of the media. 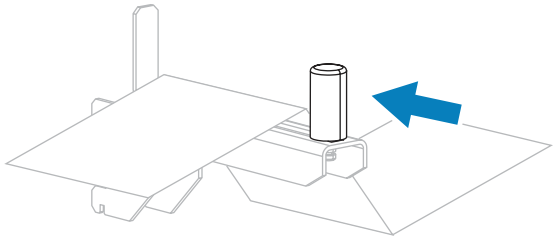 |

**4.** In which print mode will your printer be operating? For more information on print modes, see Select a Print Mode on page 43.

| If using... | Then... |
|---|---|
| TEAR OFF | Continue with Loading the Media - Tear-Off Mode on page 48. |

| If using... | Then... |
|---|---|
| 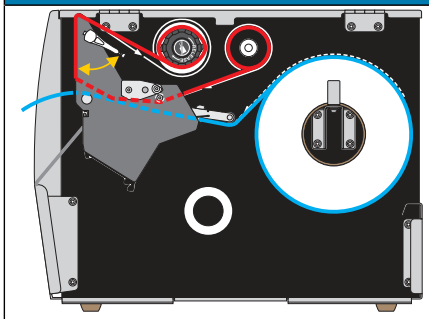 | |
| PEEL-OFF or APPLICATOR 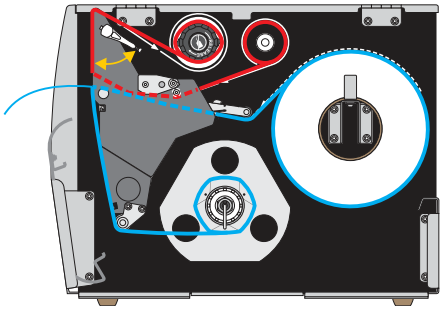 | Continue with Loading the Media - Peel-Off Mode or Applicator Mode on page 53. |
| REWIND 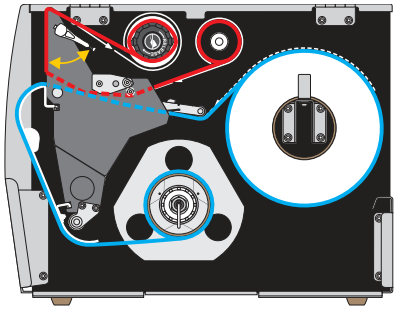 | Continue with Loading the Media - Rewind Mode on page 61. |
| CUTTER or DELAYED CUT 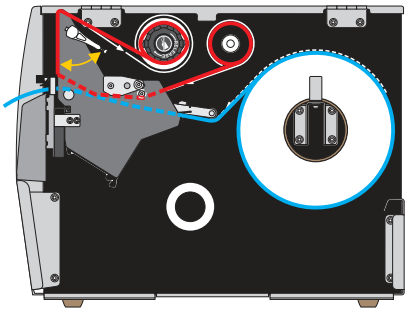 | Continue with Loading the Media - Cutter Mode or Delayed Cut Mode on page 69. |

## Loading the Media - Tear-Off Mode

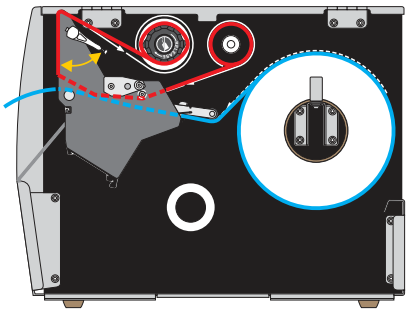

1. If you have not already done so, follow the instructions in the section Inserting the Media into the Printer on page 44.

**CAUTION—HOT SURFACE:** The printhead may be hot and could cause severe burns. Allow the printhead to cool.

2. Open the printhead assembly by rotating the printhead-open lever upward.

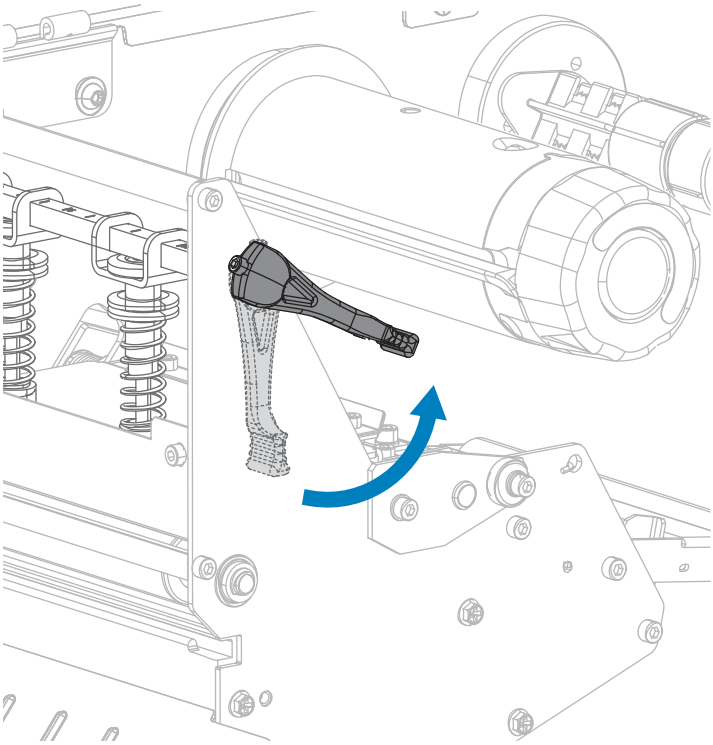

**3.** Loosen the thumb screw that is located on the bottom of the outer media guide.

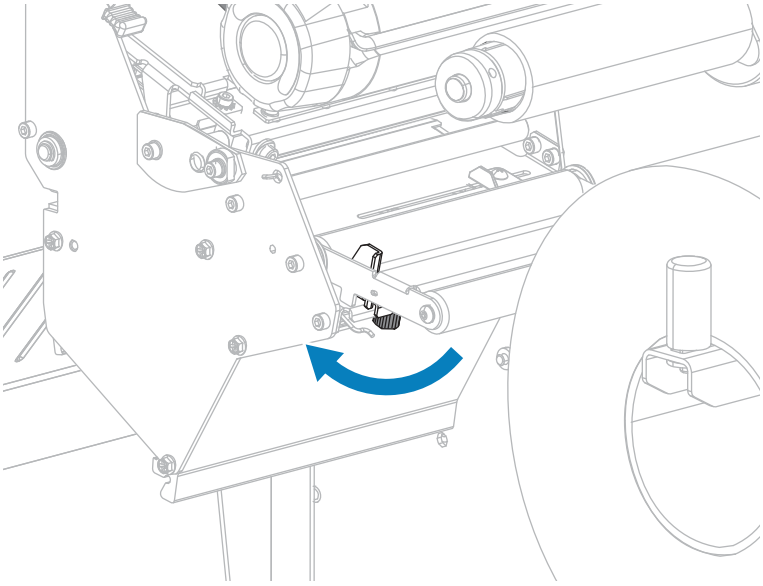

**4.** Slide the outer media guide all the way out.

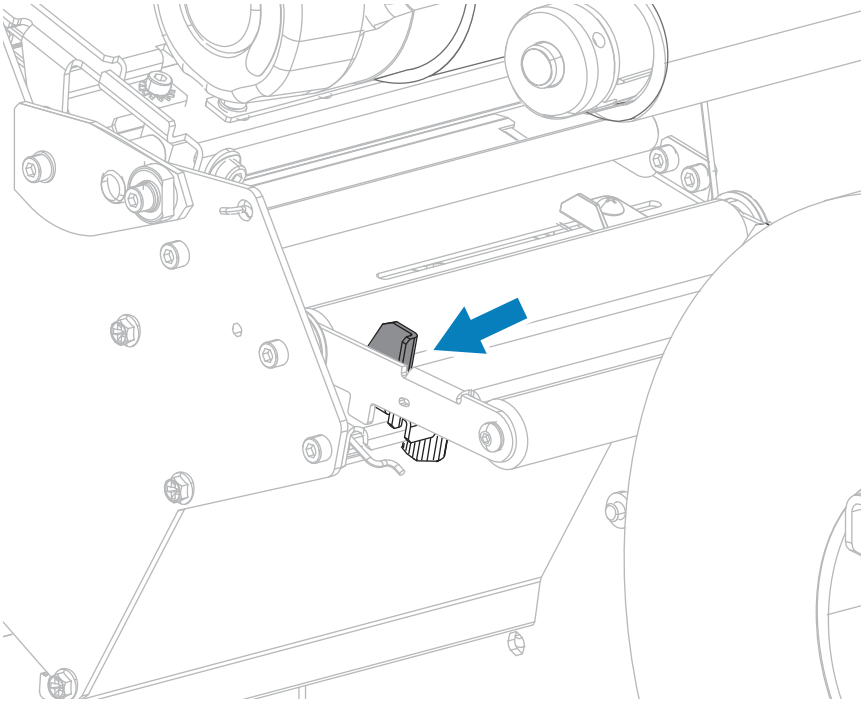

5. Thread the media under the media dancer assembly roller (1), the media guide roller (2), and then the upper media sensor (3).

**IMPORTANT:** Make sure that you thread the media under these components. If you thread the media over them, the media obstructs the ribbon sensor and causes a false RIBBON OUT error.

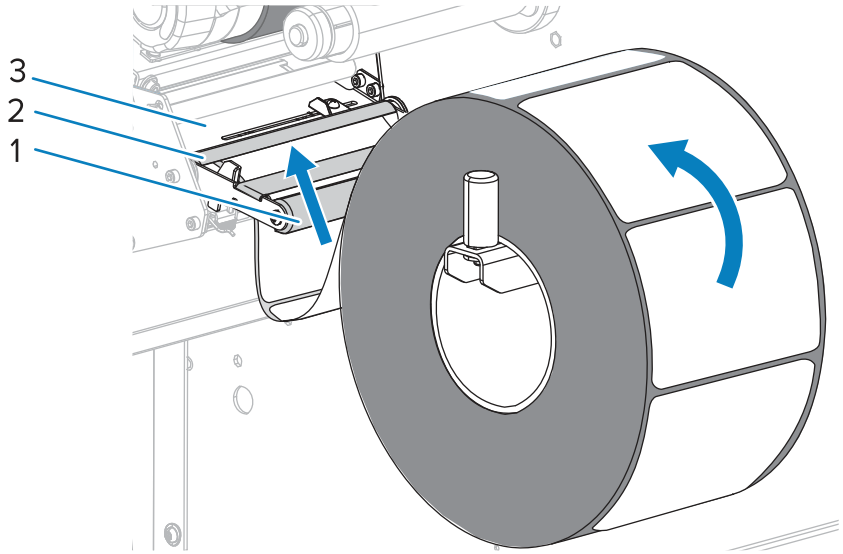


6. Push the media forward until it passes under the printhead assembly (1), under the snap plate (2), and then over the platen roller (3).

**CAUTION—HOT SURFACE:** The printhead may be hot and could cause severe burns. Allow the printhead to cool.

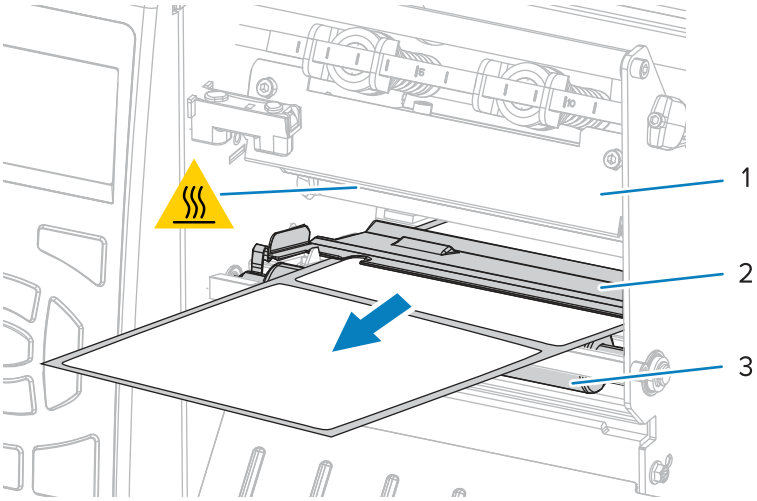


7. Does the media that you are using require ribbon for printing? If you are not sure, see When to Use Ribbon.

| If using... | Then... |
|---|---|
| Direct Thermal media (no ribbon needed) | Continue with step 8. |

| If using... | Then... |
|---|---|
| Thermal Transfer media (ribbon needed) | **a.** If you have not already done so, load ribbon in the printer. See Loading the Ribbon on page 75.<br>**b.** Continue with step 8 |

**8.** Push back the media as far as it goes, and then slide in the outer media guide until it just touches the edge of the media.

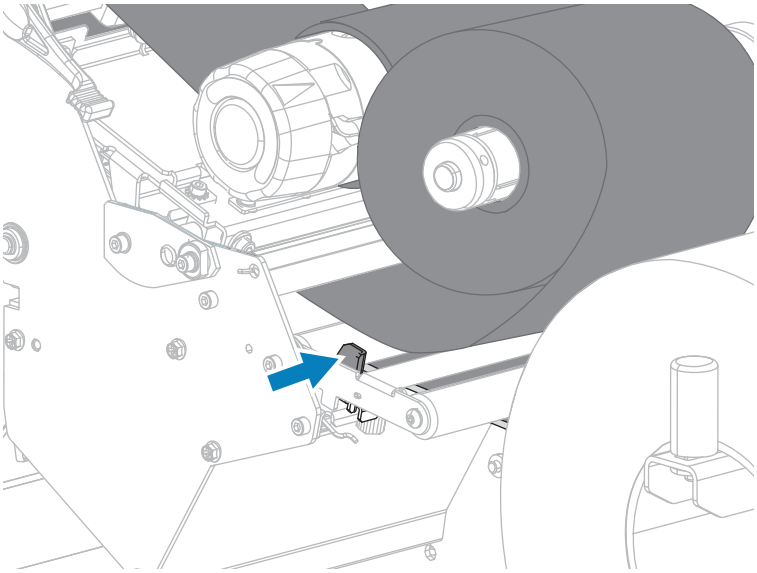

**9.** Tighten the thumb screw that is located on the bottom of the outer media guide.

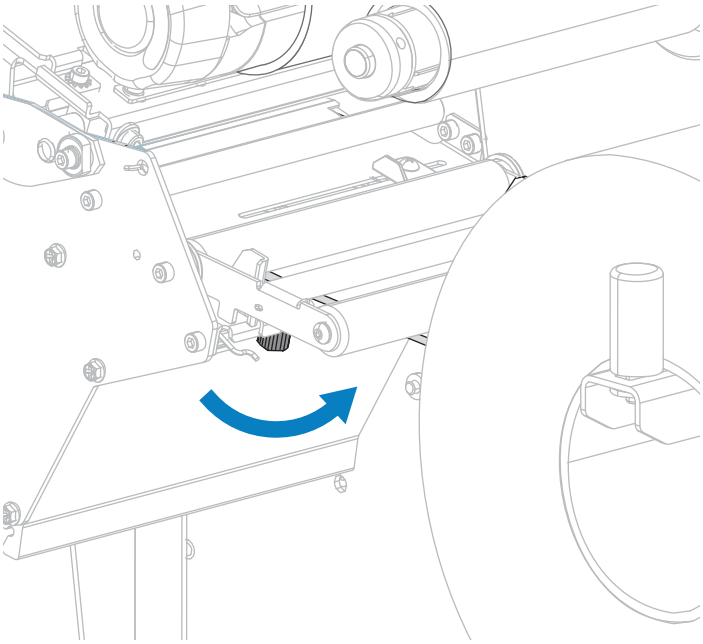

**10.** Rotate the printhead-open lever downward until it locks the printhead in place.

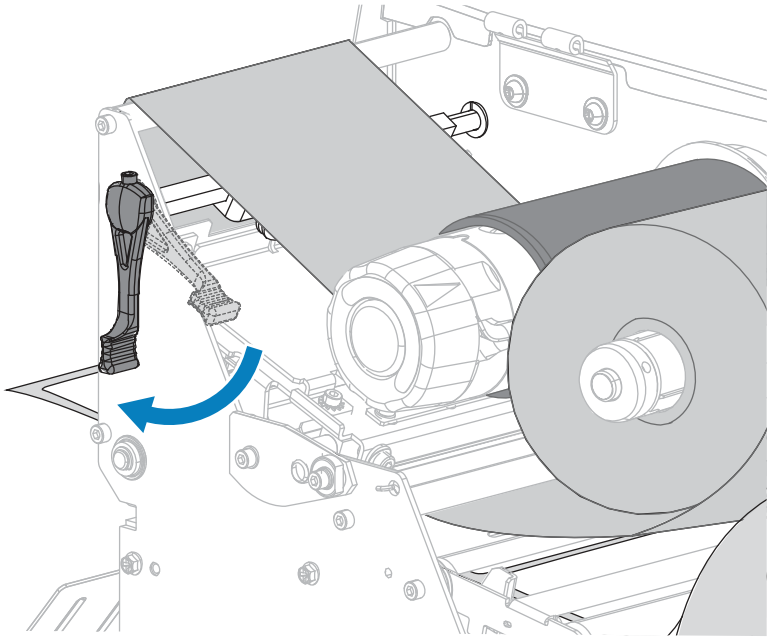

**11.** Close the media door.

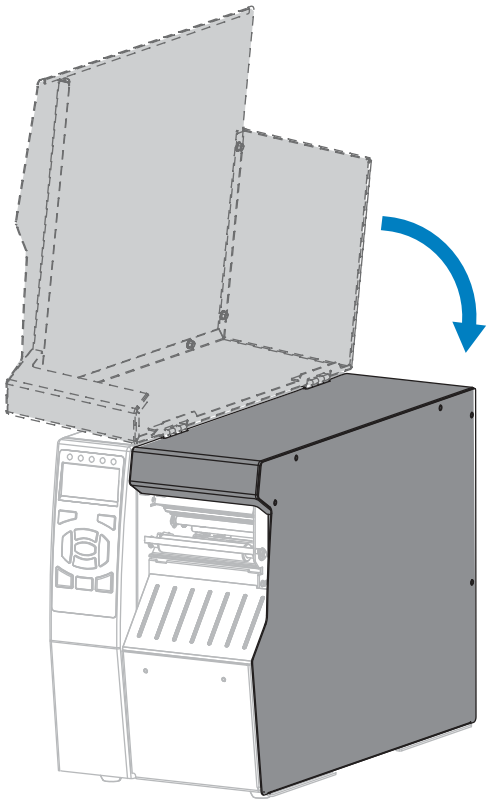

**12.** Set the printer to the appropriate print mode. (See PRINT MODE on page 100).

13. Press **PAUSE** to exit pause mode and enable printing.

    The printer may perform a label calibration or feed a label, depending on your settings.

14. For best results, calibrate the printer. See Calibrating the Ribbon and Media Sensors on page 140.

15. If desired, print a configuration or other label to verify that your printer is able to print. (See PRINT INFORMATION on page 104.)

Media loading in Tear-Off mode is complete.

## Loading the Media - Peel-Off Mode or Applicator Mode

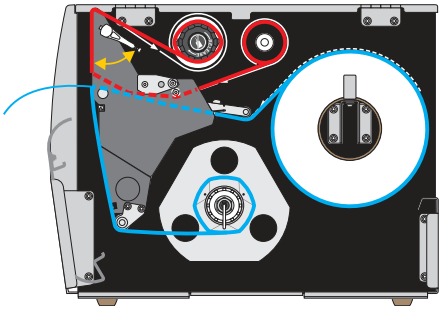

1. If you have not already done so, follow the instructions in the section Inserting the Media into the Printer on page 44.

2. If necessary, install the rewind/liner take-up plate in the peel-off position as shown. See Install the Rewind/Liner Take-Up Plate on page 154 for instructions.

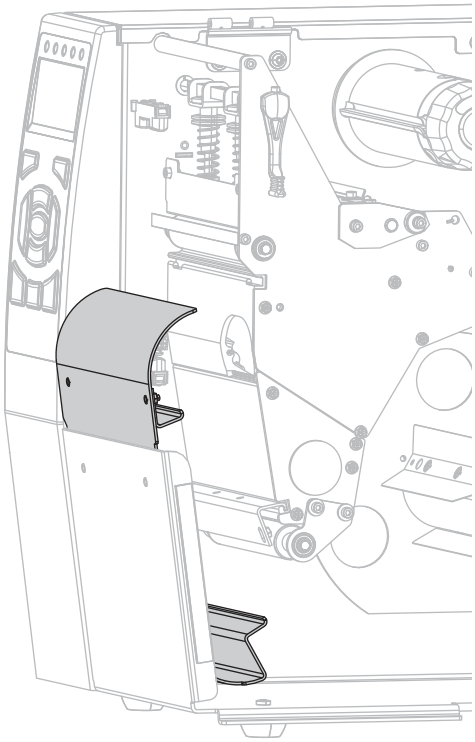

3. Open the printhead assembly by rotating the printhead-open lever upward.

**CAUTION—HOT SURFACE:** The printhead may be hot and could cause severe burns. Allow the printhead to cool.

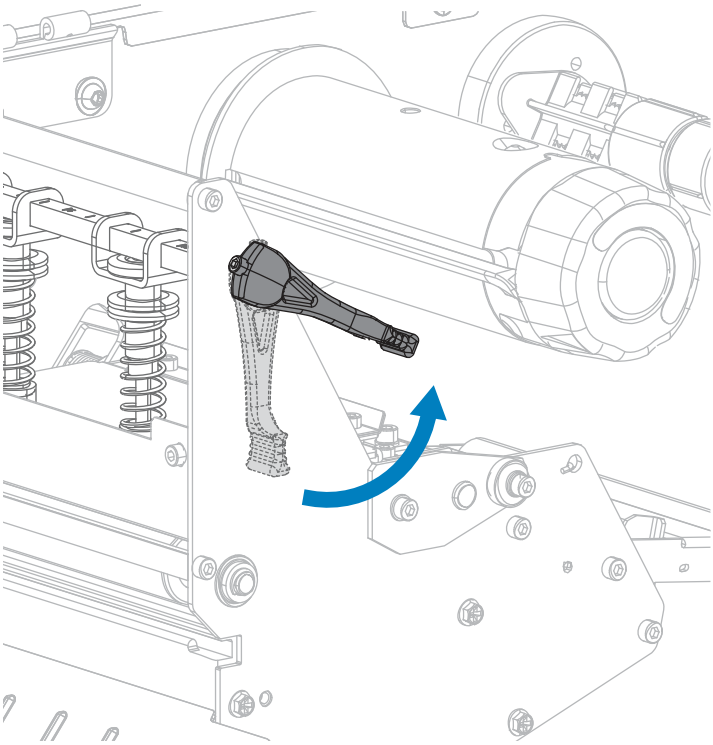

4. Loosen the thumb screw that is located on the bottom of the outer media guide.

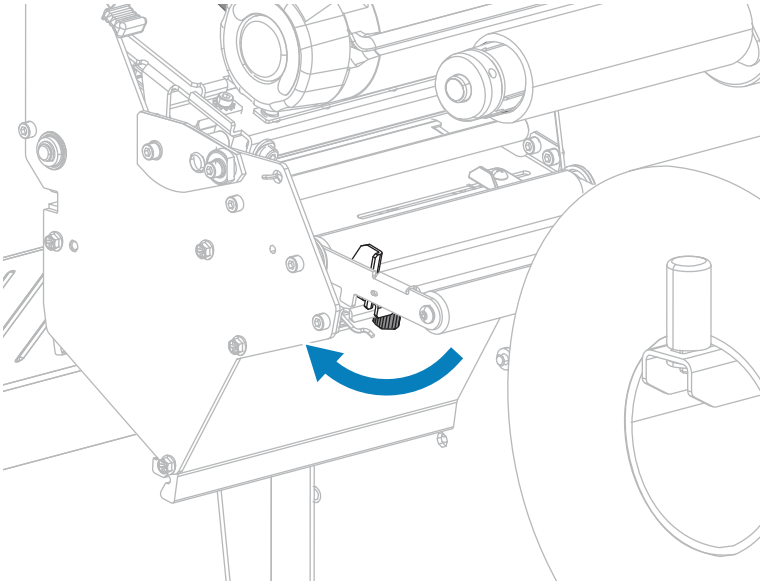

5. Slide the outer media guide all the way out.

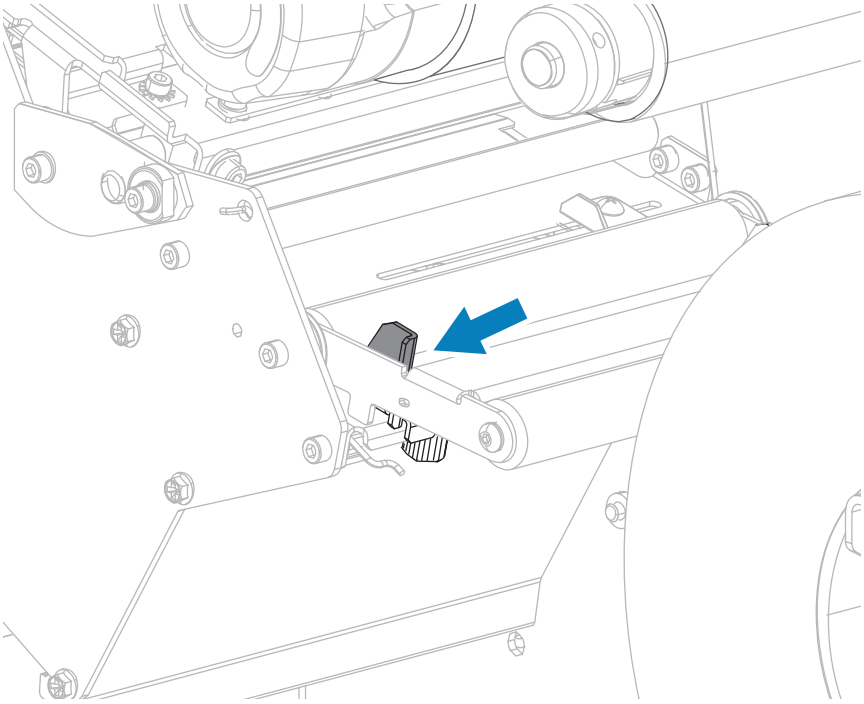

6. Thread the media under the media dancer assembly roller (1), the media guide roller (2), and then the upper media sensor (3).

**IMPORTANT:** Make sure that you thread the media under these components. If you thread the media over them, the media obstructs the ribbon sensor and causes a false RIBBON OUT error.

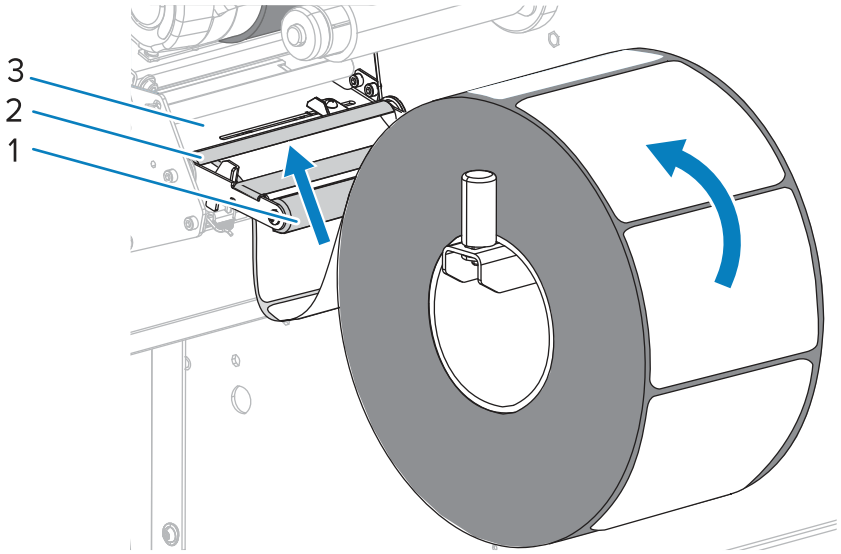

7. Push the media forward until it passes under the printhead assembly (1), under the snap plate (2), and then over the platen roller (3).

**CAUTION—HOT SURFACE:** The printhead may be hot and could cause severe burns. Allow the printhead to cool.

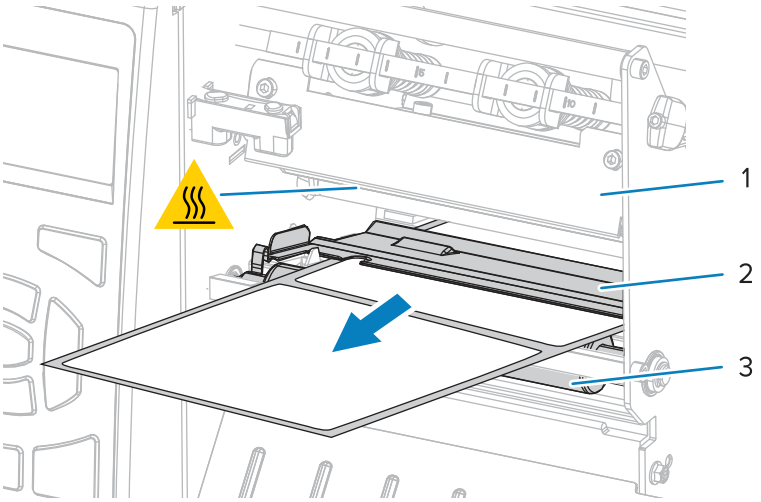


8. Extend approximately 500 mm (18 in.) of media out of the printer. Remove and discard the labels from this exposed media, leaving just the liner.

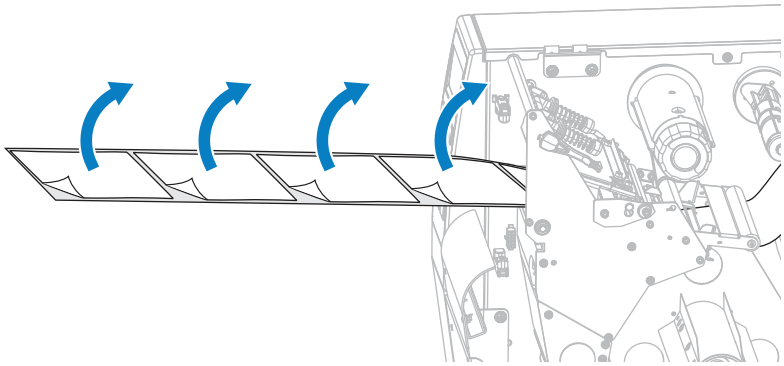

**9.** Feed the liner behind the rewind/liner take-up plate.

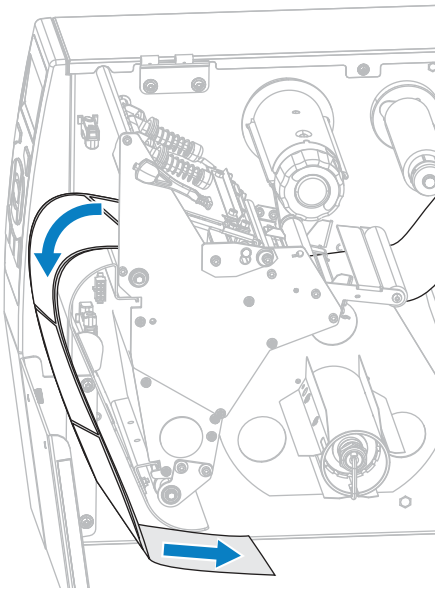

**10.** If desired, slide a core onto the rewind spindle until it is flush against the guide plate. A core is not necessary for liner take-up.

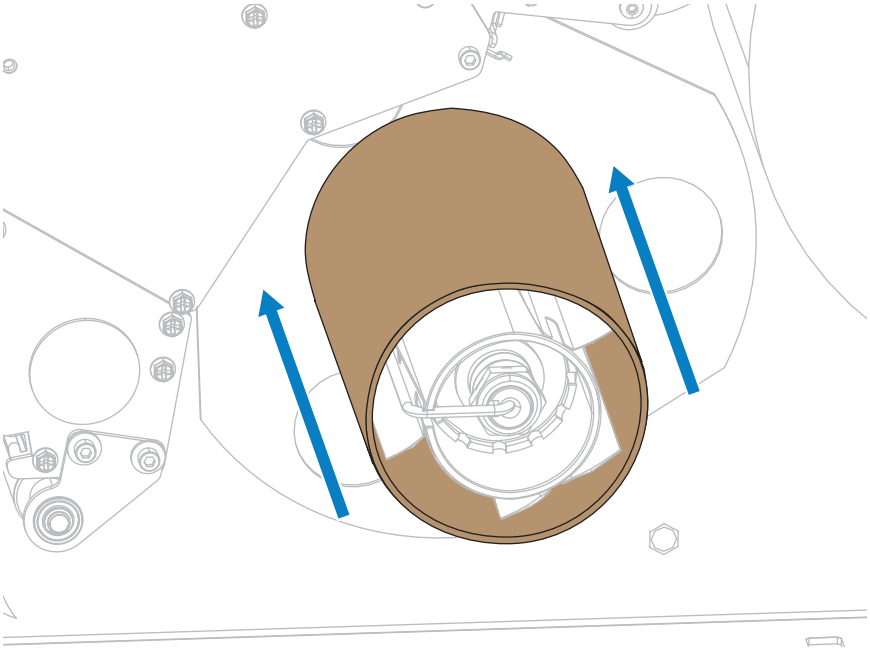

**11.** Remove the hook from the rewind spindle.

**12.** Wind the liner around the rewind spindle as shown. Rotate the rewind spindle several turns to tighten the liner and remove any slack.

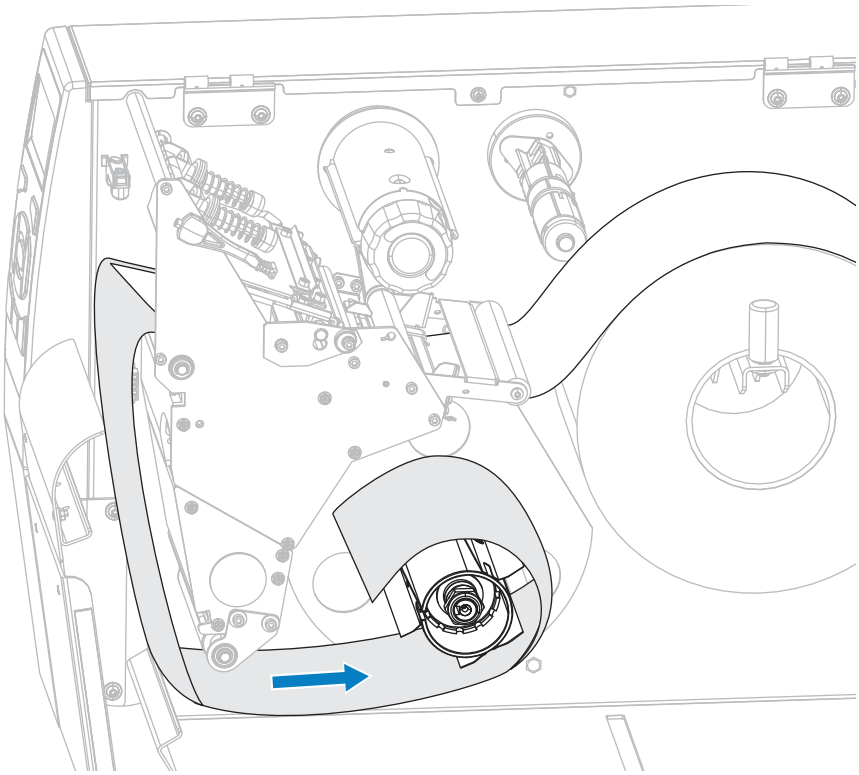

**13.** Reinstall the spindle hook over the liner. Insert the long end of the hook into the small hole on the guide plate (1). Insert the short end of the hook into the hole in the center of the adjusting nut (2).

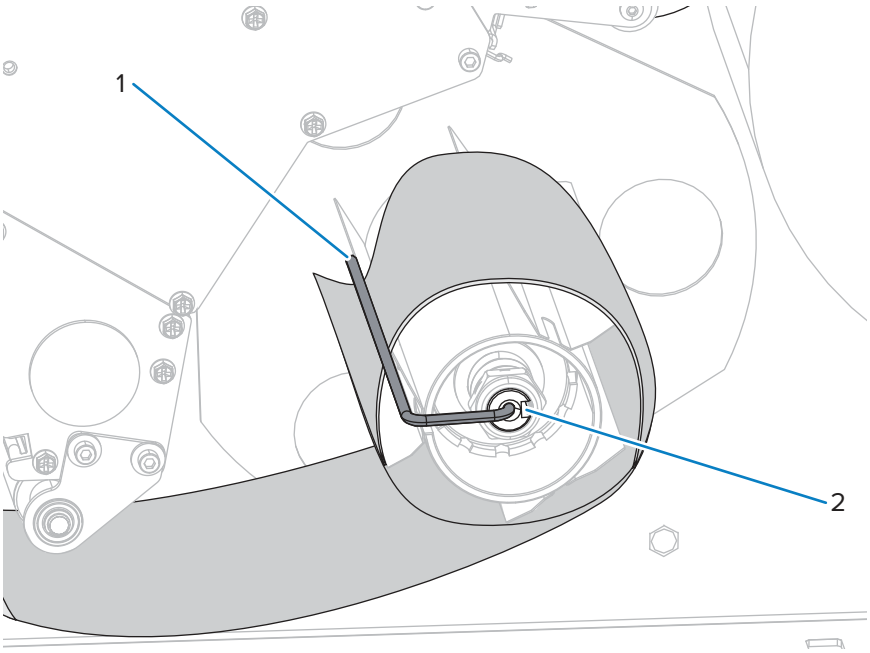

**14.** Does the media that you are using require ribbon for printing? If you are not sure, see When to Use Ribbon.

| If using... | Then... |
|---|---|
| Direct Thermal media (no ribbon needed) | Continue with step 15. |
| Thermal Transfer media (ribbon needed) | **a.** If you have not already done so, load ribbon in the printer. See Loading the Ribbon on page 75.<br>**b.** Continue with step 15. |

**15.** Push back the media as far as it goes, and then slide in the outer media guide until it just touches the edge of the media.

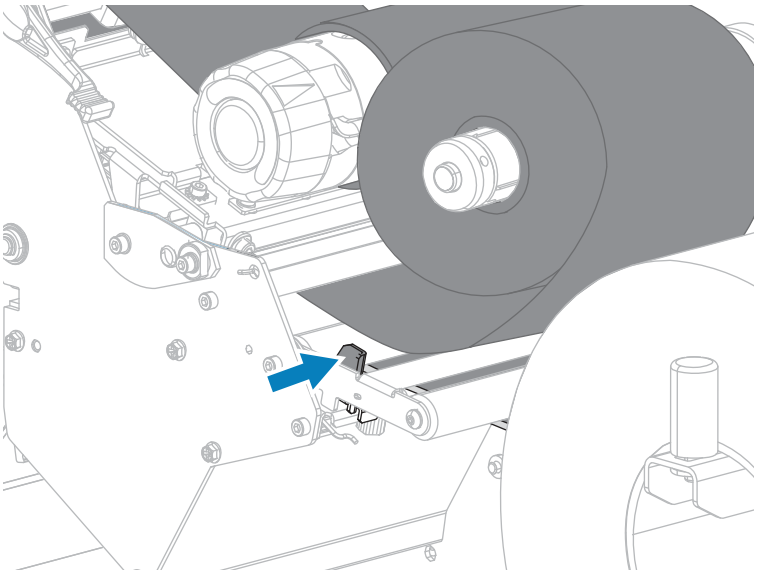

**16.** Tighten the thumb screw that is located on the bottom of the outer media guide.

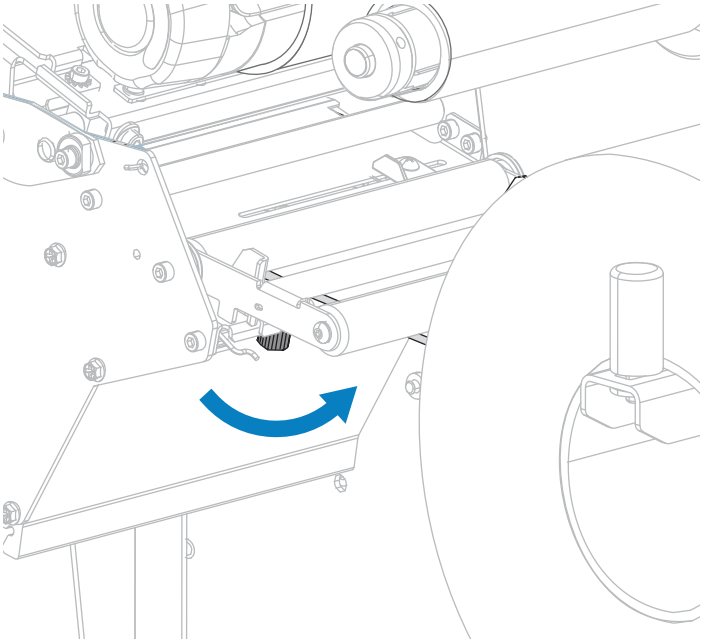

**17.** Rotate the printhead-open lever downward until it locks the printhead in place.

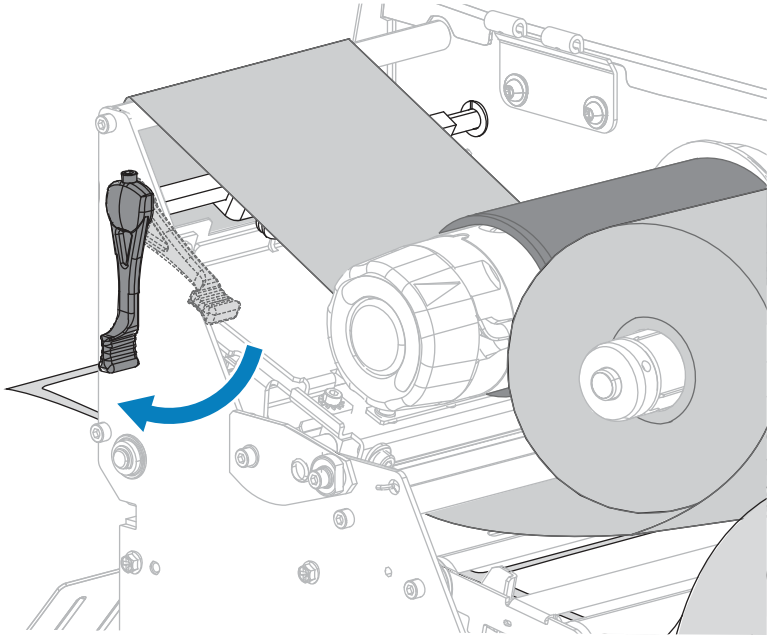

18. Close the media door.

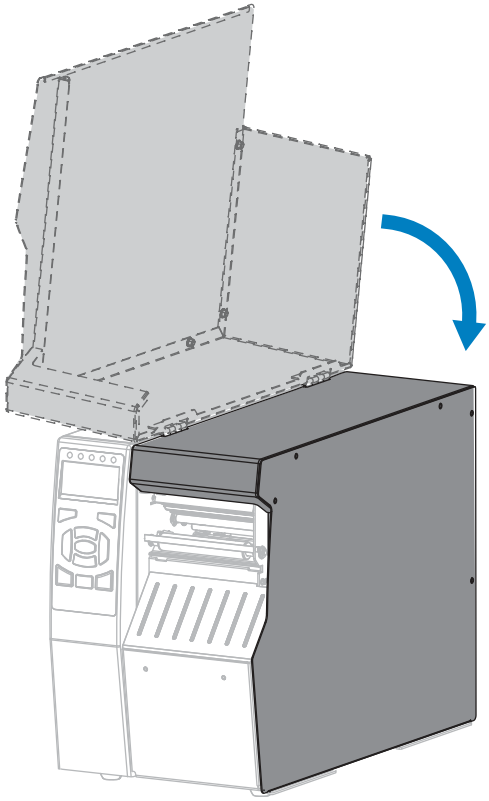

19. Set the printer to the appropriate print mode. (See PRINT MODE on page 100).
20. Press **PAUSE** to exit pause mode and enable printing.

    The printer may perform a label calibration or feed a label, depending on your settings.
21. For best results, calibrate the printer. See Calibrating the Ribbon and Media Sensors on page 140.
22. If desired, print a configuration or other label to verify that your printer is able to print. (See PRINT INFORMATION on page 104.)

Media loading in Peel-Off mode is complete.

## Loading the Media - Rewind Mode

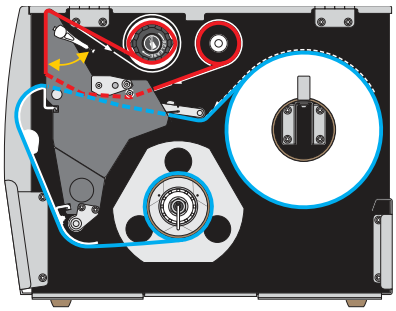

1. If you have not already done so, follow the instructions in the section Inserting the Media into the Printer on page 44.

2. If necessary, install the rewind/liner take-up plate in the rewind position as shown. See Install the Rewind/Liner Take-Up Plate on page 154 for instructions.

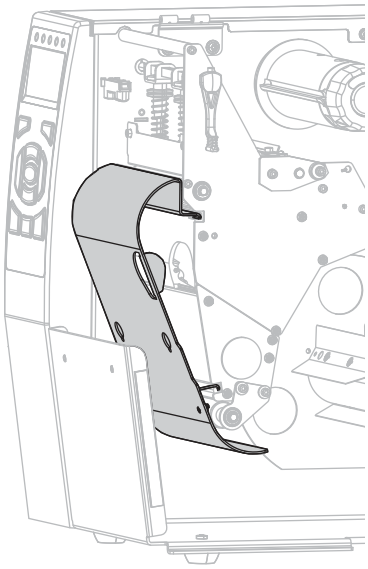

3. Slide a core onto the rewind spindle until it is flush against the guide plate.

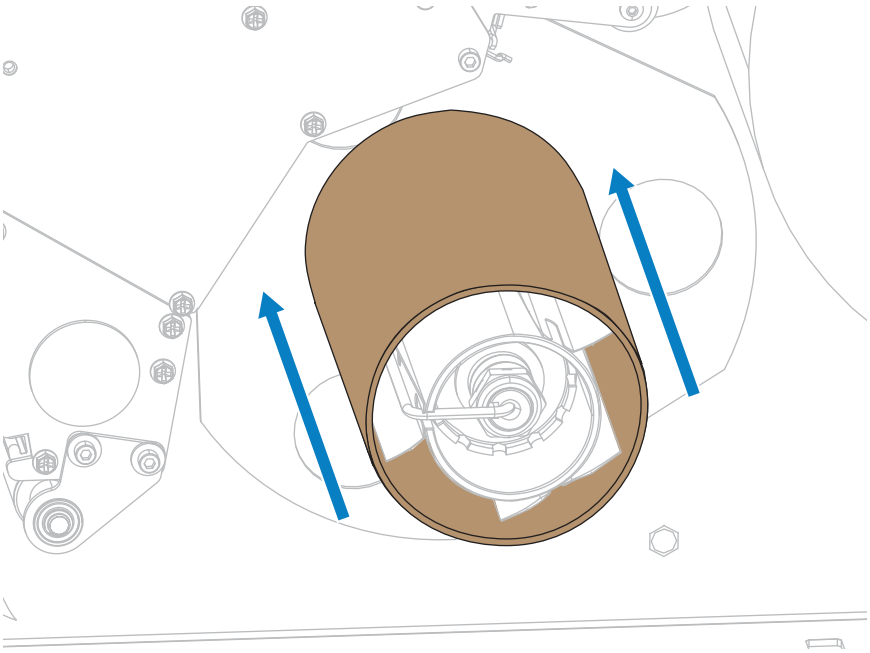

4. Open the printhead assembly by rotating the printhead-open lever upward.

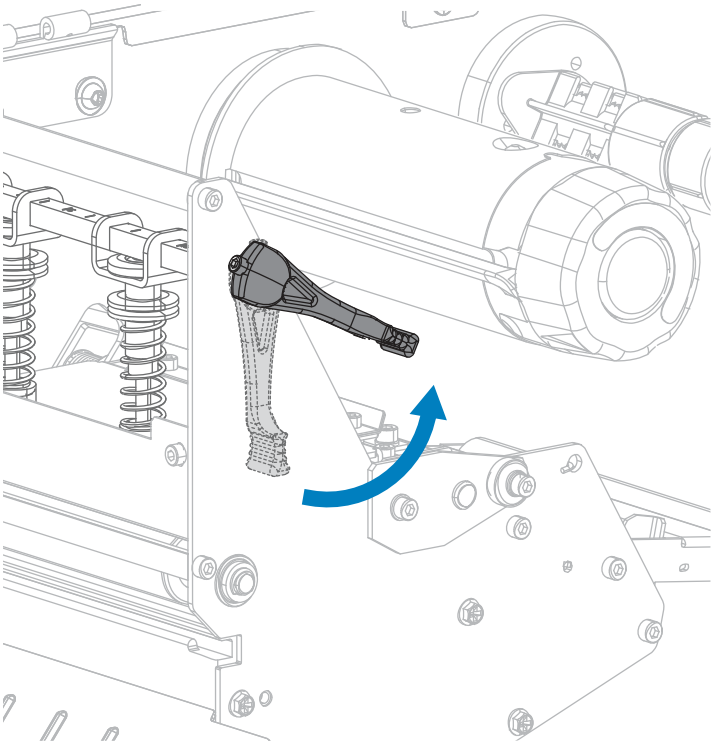

5. Loosen the thumb screw that is located on the bottom of the outer media guide.

**CAUTION—HOT SURFACE:** The printhead may be hot and could cause severe burns. Allow the printhead to cool.

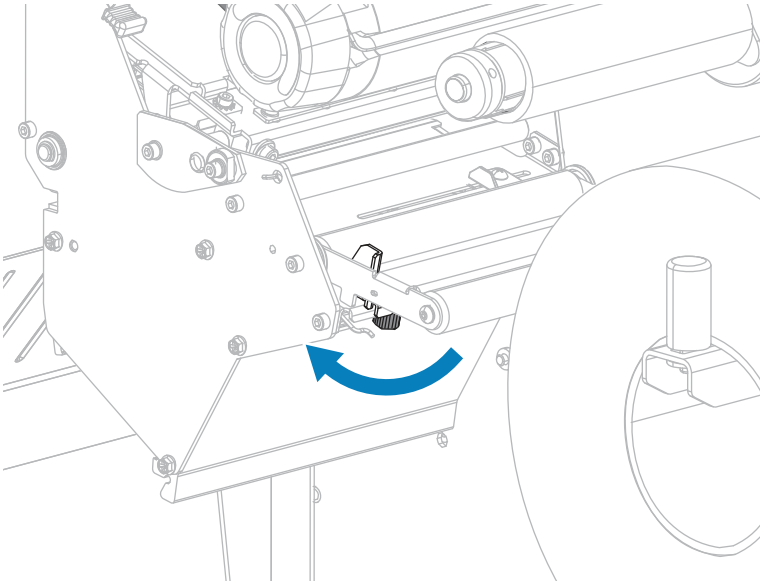

**6.** Slide the outer media guide all the way out.

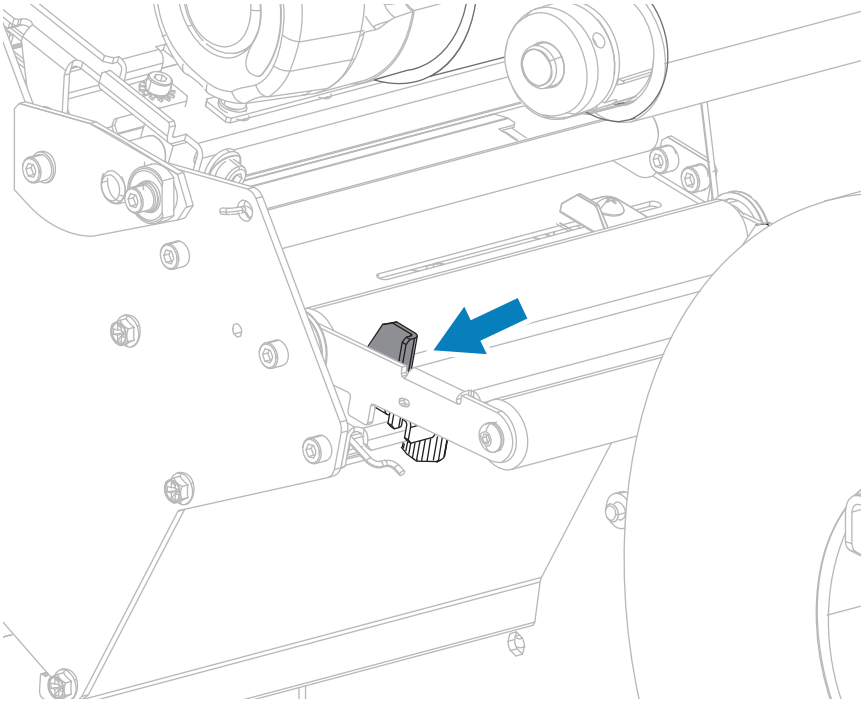

**7.** Thread the media under the media dancer assembly roller (1), the media guide roller (2), and then the upper media sensor (3).

**IMPORTANT:** Make sure that you thread the media under these components. If you thread the media over them, the media obstructs the ribbon sensor and causes a false RIBBON OUT error.

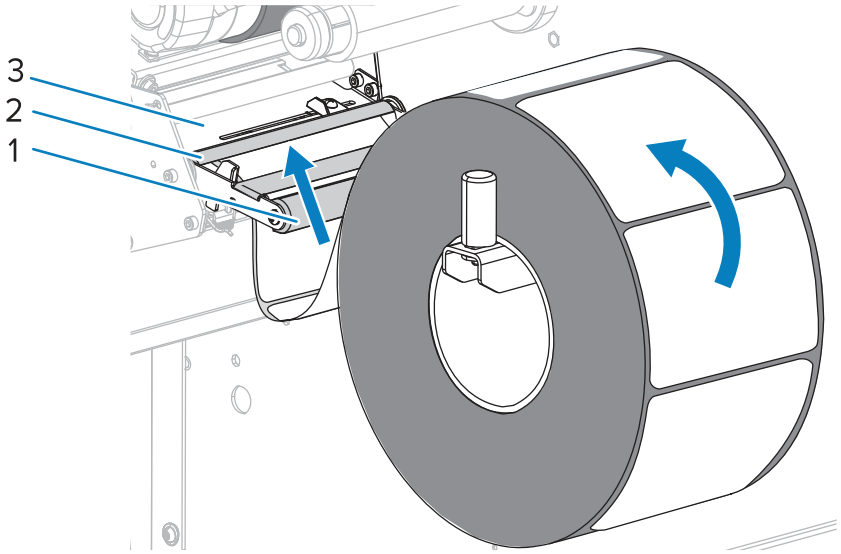

8. Push the media forward until it passes under the printhead assembly (1), under the snap plate (2), and then over the platen roller (3).

**CAUTION—HOT SURFACE:** The printhead may be hot and could cause severe burns. Allow the printhead to cool.

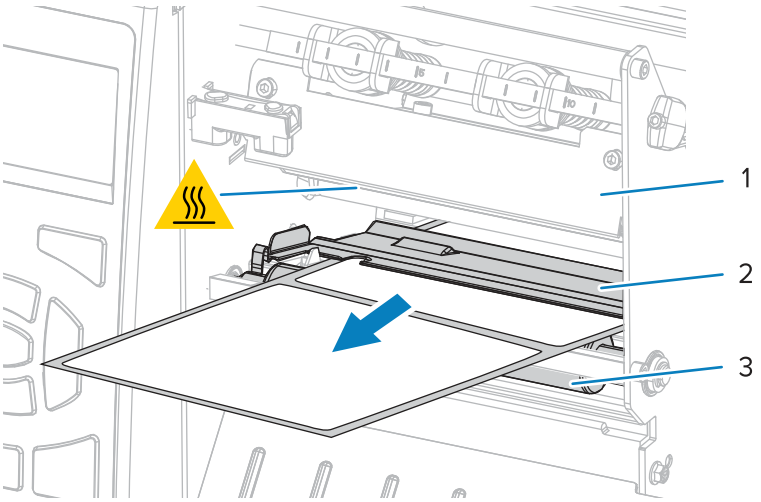


9. Extend approximately 500 mm (18 in.) of media out of the printer.

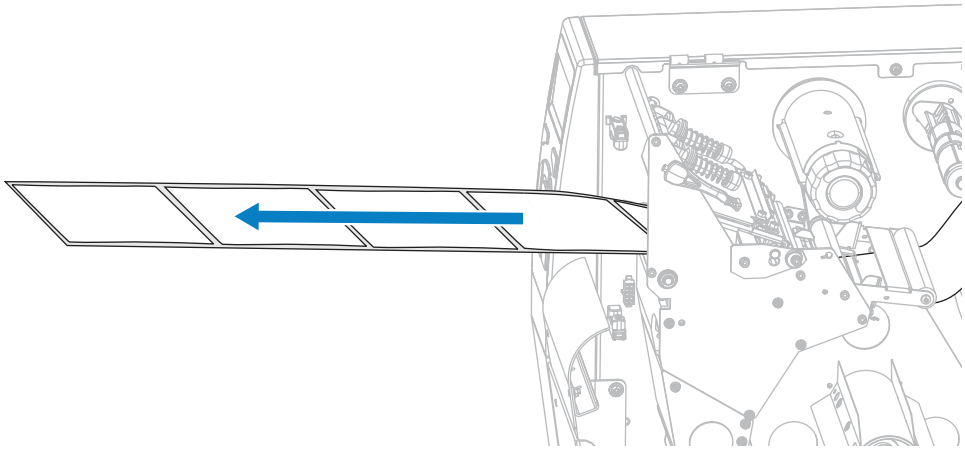

**10.** Feed the media over the rewind/liner take-up plate.

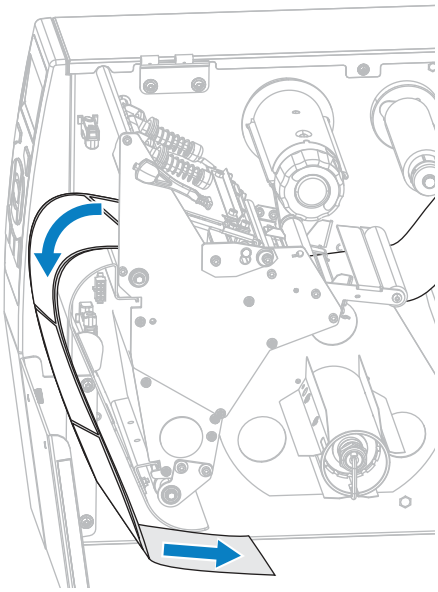

**11.** Wind the media around the rewind spindle as shown. Rotate the rewind spindle several turns to tighten the media and remove any slack.

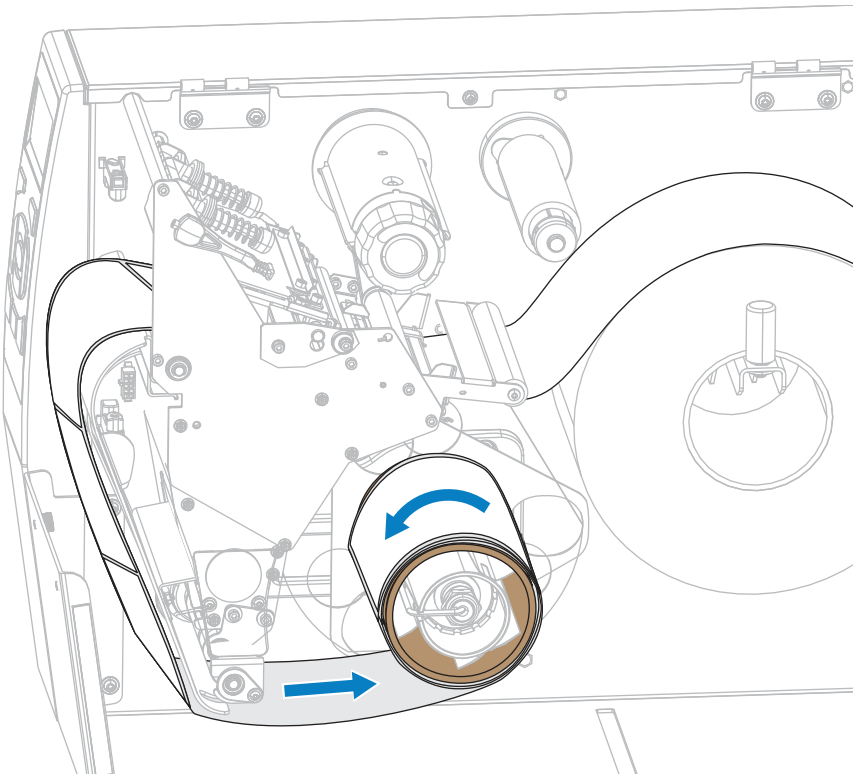

**12.** Does the media that you are using require ribbon for printing? If you are not sure, see When to Use Ribbon.

| If using... | Then... |
|---|---|
| Direct Thermal media (no ribbon needed) | Continue with step 13. |
| Thermal Transfer media (ribbon needed) | **a.** If you have not already done so, load ribbon in the printer. See Loading the Ribbon on page 75.<br>**b.** Continue with step 13. |

**13.** Push back the media as far as it goes, and then slide in the outer media guide until it just touches the edge of the media.

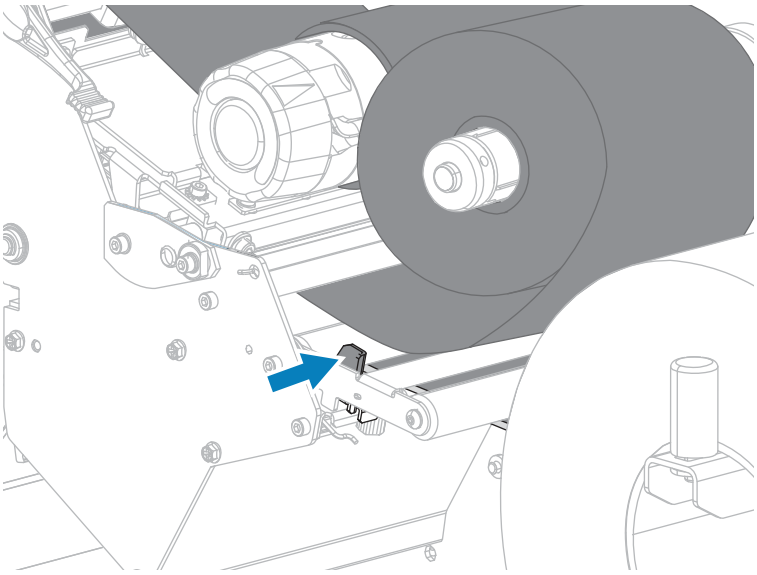

**14.** Tighten the thumb screw that is located on the bottom of the outer media guide.

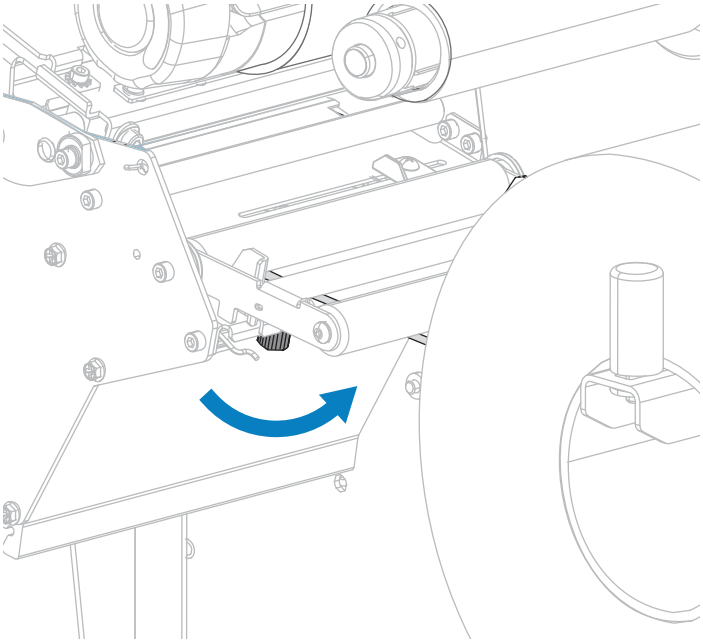

**15.** Rotate the printhead-open lever downward until it locks the printhead in place.

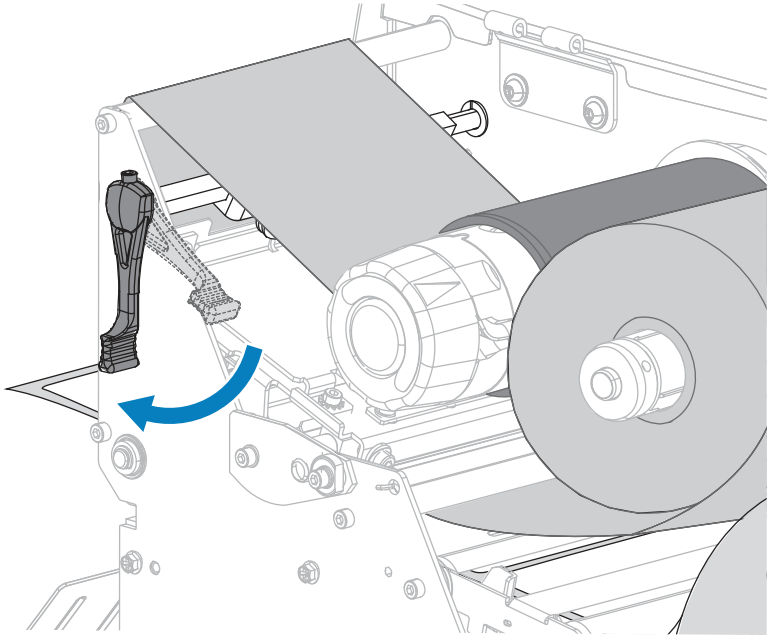

16. Close the media door.

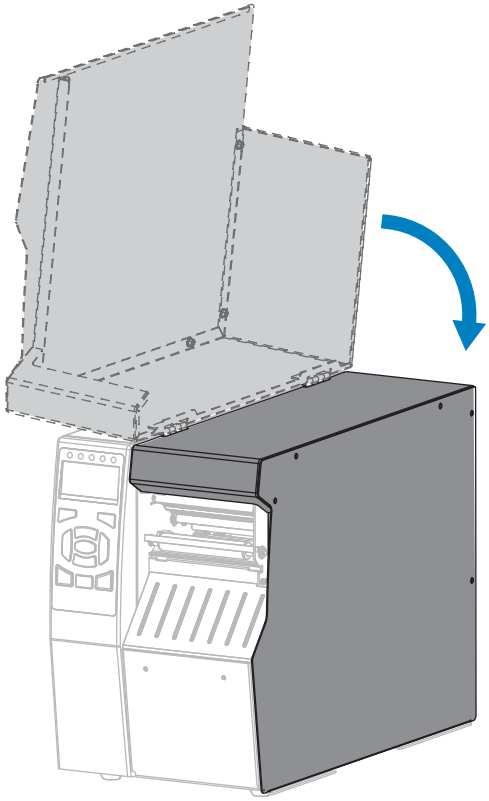

17. Set the printer to Rewind mode. (See PRINT MODE on page 100).
18. Press **PAUSE** to exit pause mode and enable printing.

    The printer may perform a label calibration or feed a label, depending on your settings.
19. For best results, calibrate the printer. See Calibrate the Ribbon and Media Sensors on page 177.
20. If desired, print a configuration or other label to verify that your printer is able to print. (See PRINT INFORMATION on page 104.)

Media loading in Rewind mode is complete.

## Loading the Media - Cutter Mode or Delayed Cut Mode

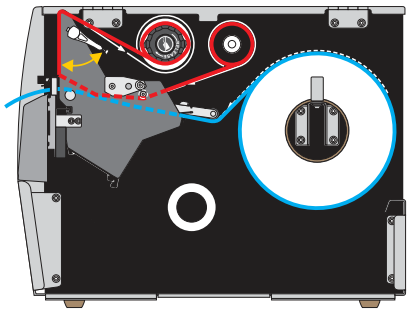

1. If you have not already done so, follow the instructions in the section Inserting the Media into the Printer on page 44.

2. Open the printhead assembly by rotating the printhead-open lever upward.

**CAUTION—HOT SURFACE:** The printhead may be hot and could cause severe burns. Allow the printhead to cool.

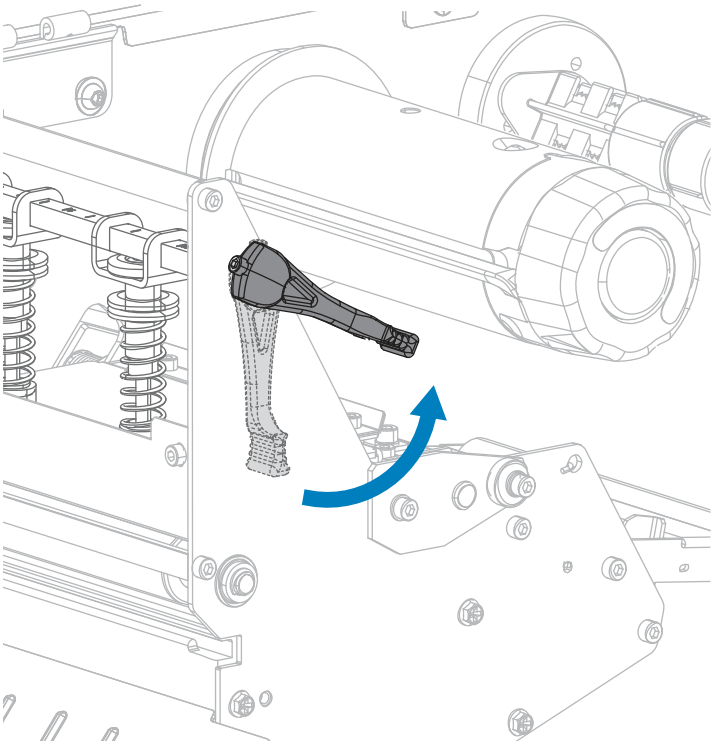

3. Loosen the thumb screw that is located on the bottom of the outer media guide.

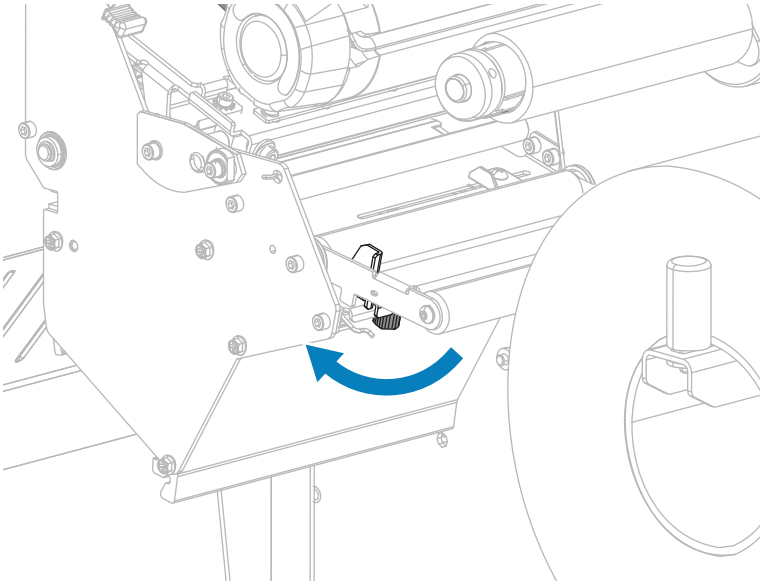

4. Slide the outer media guide all the way out.

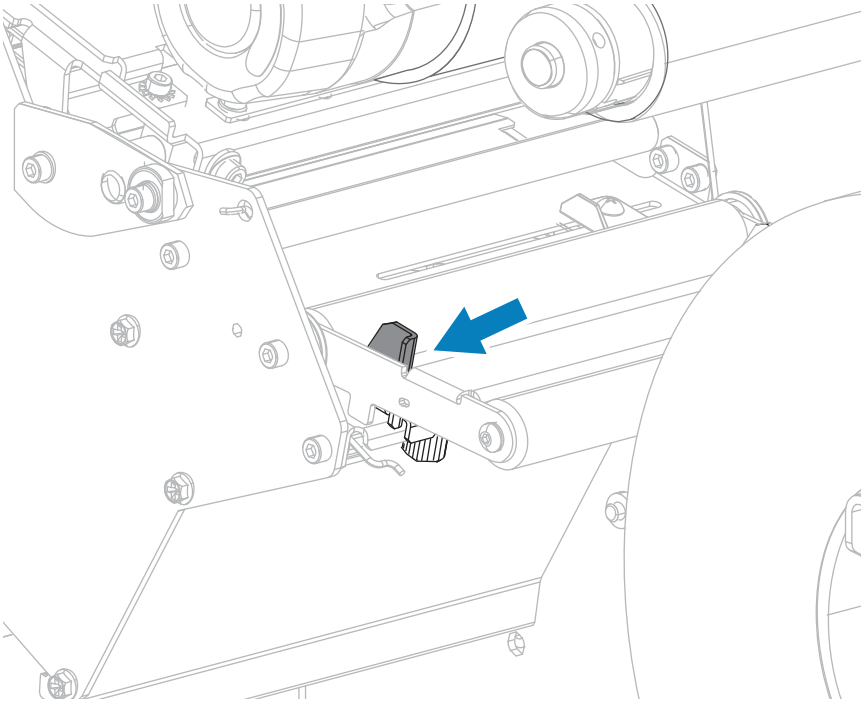

5. Thread the media under the media dancer assembly roller (1), the media guide roller (2), and then the upper media sensor (3).

**IMPORTANT:** Make sure that you thread the media under these components. If you thread the media over them, the media obstructs the ribbon sensor and causes a false RIBBON OUT error.

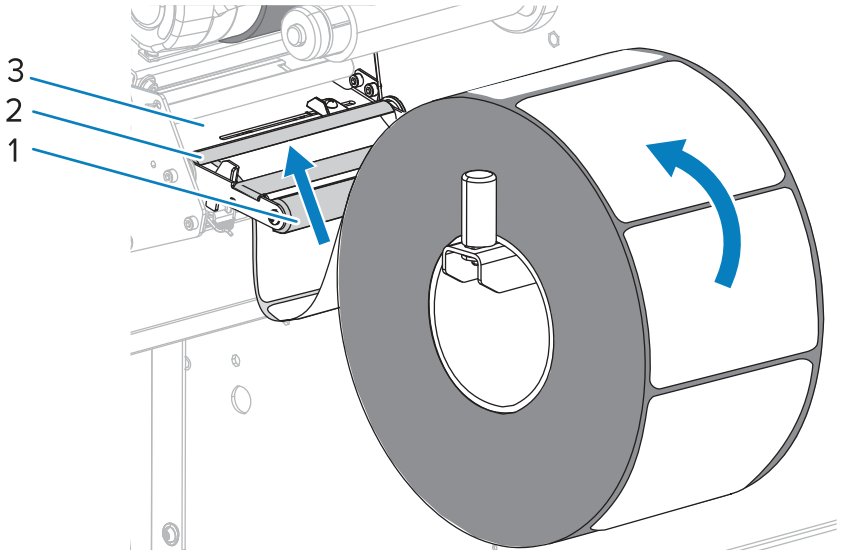

6. Push the media forward until it passes under the printhead assembly (1), under the snap plate (2), and then through the cutter assembly (3).

**CAUTION—HOT SURFACE:** The printhead may be hot and could cause severe burns. Allow the printhead to cool.

**CAUTION:** The cutter blade is sharp. Do not touch or rub the blade with your fingers.

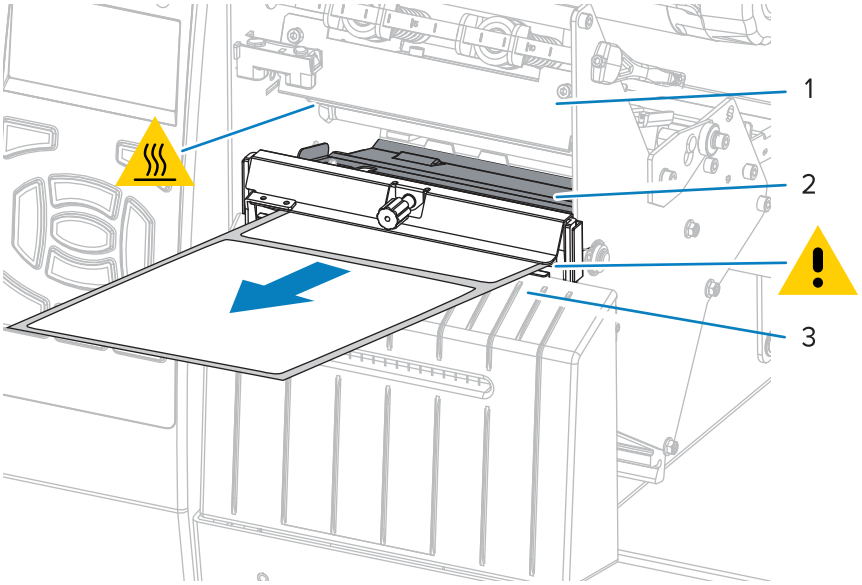


7. Does the media that you are using require ribbon for printing? If you are not sure, see When to Use Ribbon.

| If using... | Then... |
|---|---|
| Direct Thermal media (no ribbon needed) | Continue with step 8. |
| Thermal Transfer media (ribbon needed) | **a.** If you have not already done so, load ribbon in the printer. See Loading the Ribbon on page 75.<br>**b.** Continue with step 8. |

8. Push back the media as far as it goes, and then slide in the outer media guide until it just touches the edge of the media.

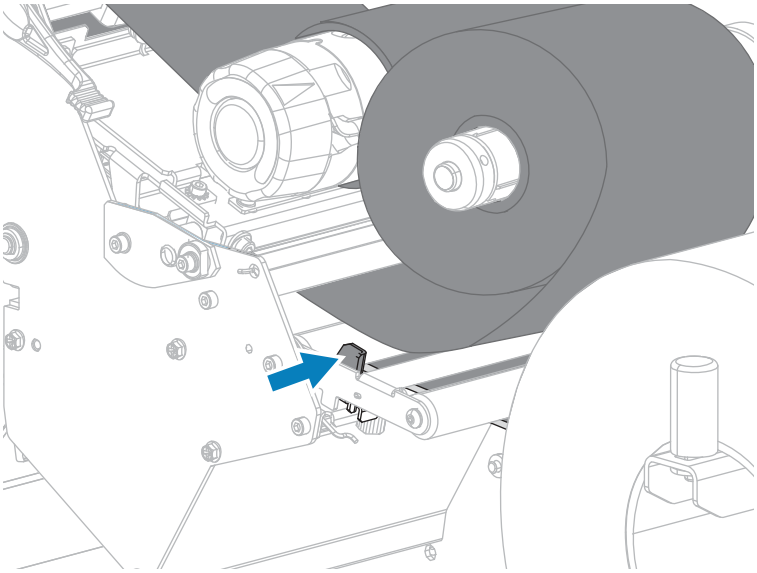

9. Tighten the thumb screw that is located on the bottom of the outer media guide.

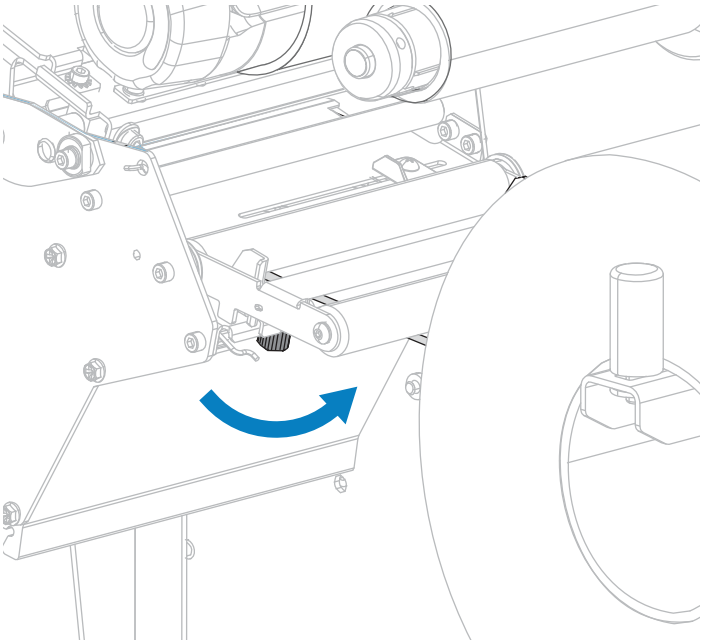

**10.** Rotate the printhead-open lever downward until it locks the printhead in place.

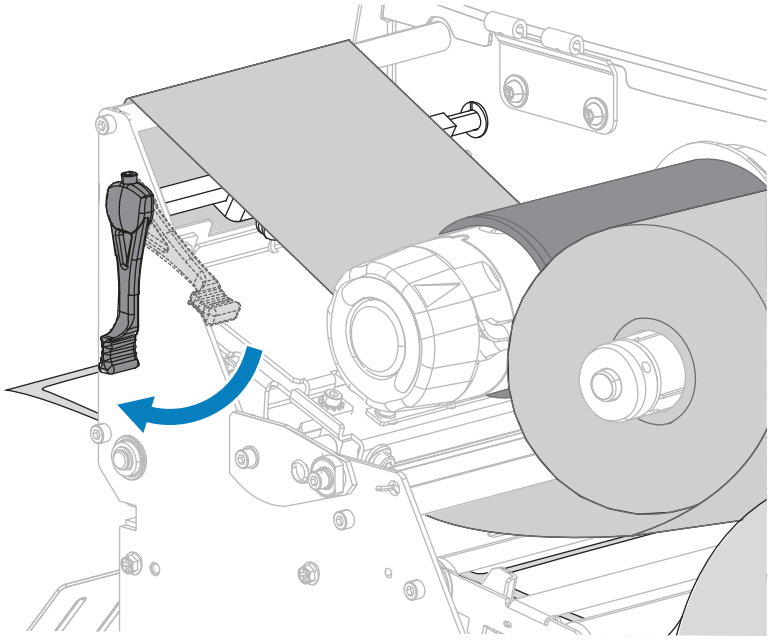

**11.** Close the media door.

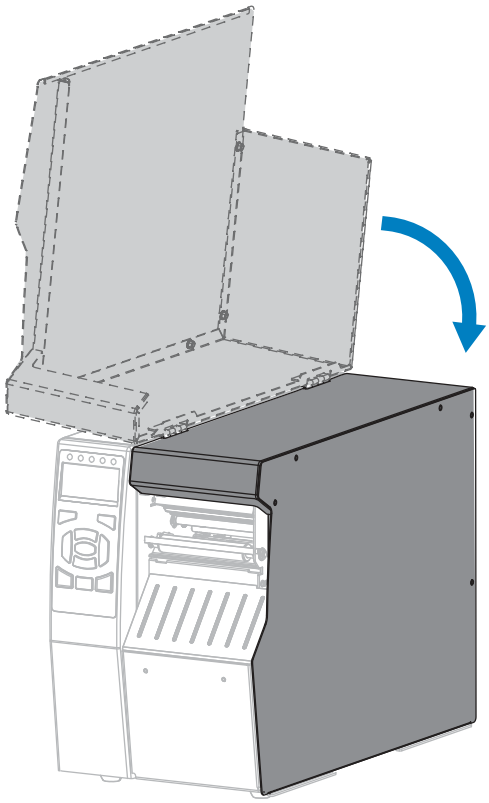

**12.** Set the printer to the appropriate print mode. (See PRINT MODE on page 100).

13. Press **PAUSE** to exit pause mode and enable printing.

    The printer may perform a label calibration or feed a label, depending on your settings.

14. For best results, calibrate the printer. See Calibrating the Ribbon and Media Sensors on page 140.

15. If desired, print a configuration or other label to verify that your printer is able to print. (See PRINT INFORMATION on page 104.)

Media loading in Cutter mode is complete.

## Loading the Ribbon

Ribbon is used only with thermal transfer labels. For direct thermal labels, do not load ribbon in the printer.

To determine if ribbon must be used with a particular media, see When to Use Ribbon on page 16.

**CAUTION:** While performing any tasks near an open printhead, remove all rings, watches, hanging necklaces, identification badges, or other metallic objects that could touch the printhead. You are not required to turn off the printer power when working near an open printhead, but Zebra recommends it as a precaution. If you turn off the power, you will lose all temporary settings, such as label formats, and you must reload them before you resume printing.

**IMPORTANT:** Use ribbon that is wider than the media to protect the printhead from wear. Ribbon must be coated on the outside.

1. Raise the media door.

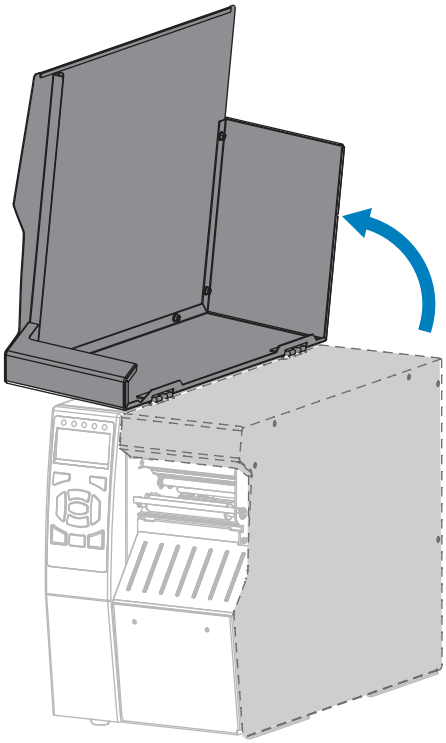

2. Open the printhead assembly by rotating the printhead-open lever upward.

**CAUTION:** The printhead may be hot and could cause severe burns. Allow the printhead to cool.

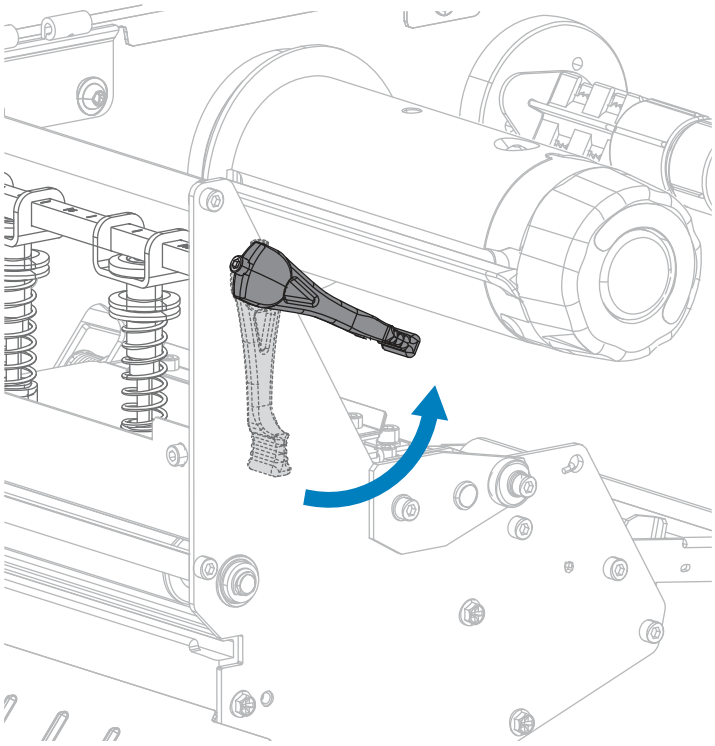

3. Align the segments of the ribbon supply spindle.

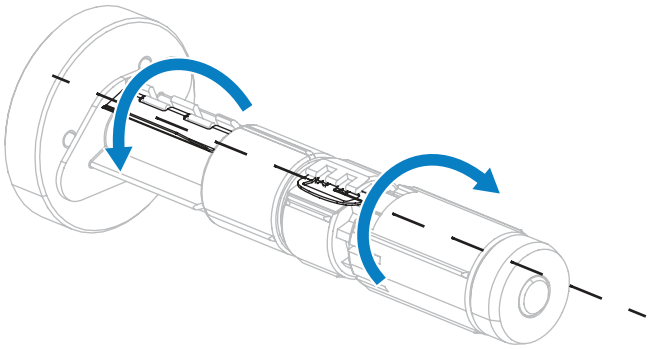

**4.** Place the roll of ribbon on the ribbon supply spindle with the loose end of the ribbon unrolling as shown. Push the roll back as far as it will go.

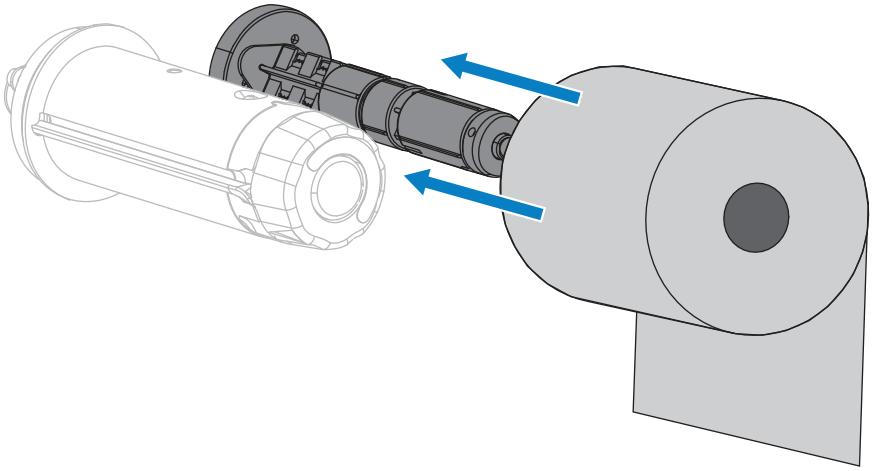

**5.** A ribbon leader makes ribbon loading and unloading easier. Does your roll of ribbon have paper or something else attached to the end to serve as a ribbon leader?

| If... | Then... |
|---|---|
| Yes | Continue with the next step. |
| No | a. Cut or tear about 100–150 mm (4–6 in.) of media from the roll.<br> 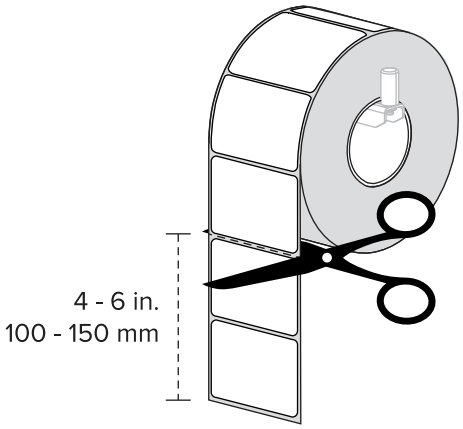 <br><br>b. Peel a label from the media strip.<br> 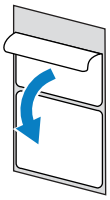 <br>c. Use this label to attach the end of the ribbon to the media strip. The media strip acts as a ribbon leader. |

| If... | Then... |
|---|---|
| | 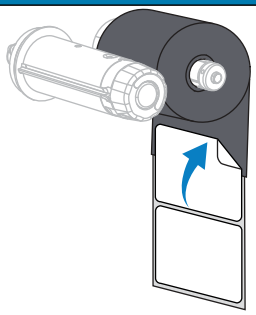 |

6. Thread the ribbon leader under the ribbon guide roller and the printhead assembly.

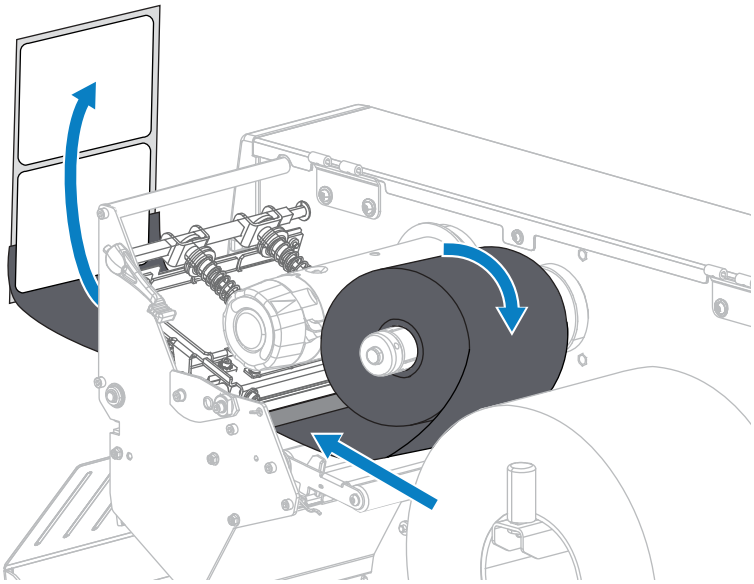

7. Bring the ribbon leader over the upper ribbon roller and then under the ribbon take-up spindle. Wrap the leader and the ribbon around the ribbon take-up spindle as shown. Rotate the spindle several turns to wind the ribbon and remove any slack.

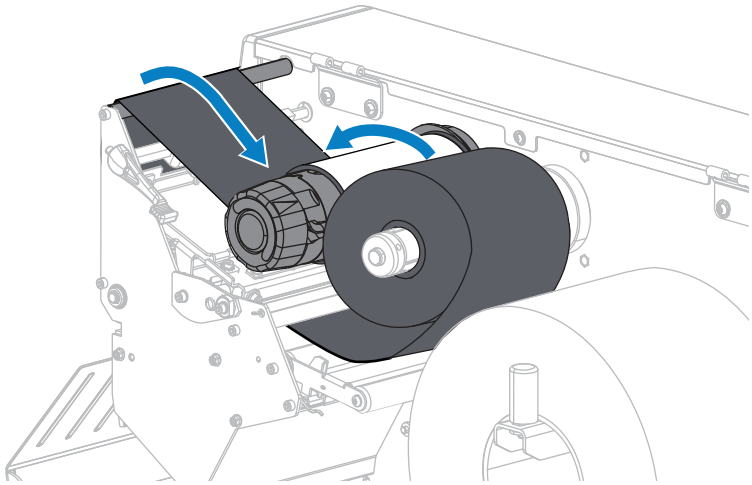

**8.** Is media already loaded in the printer?

| If... | Then... |
|---|---|
| No | Continue with Load the Media on page 44 to load media in the printer. |
| Yes | a. Rotate the printhead-open lever downward until it locks the printhead in place.<br> 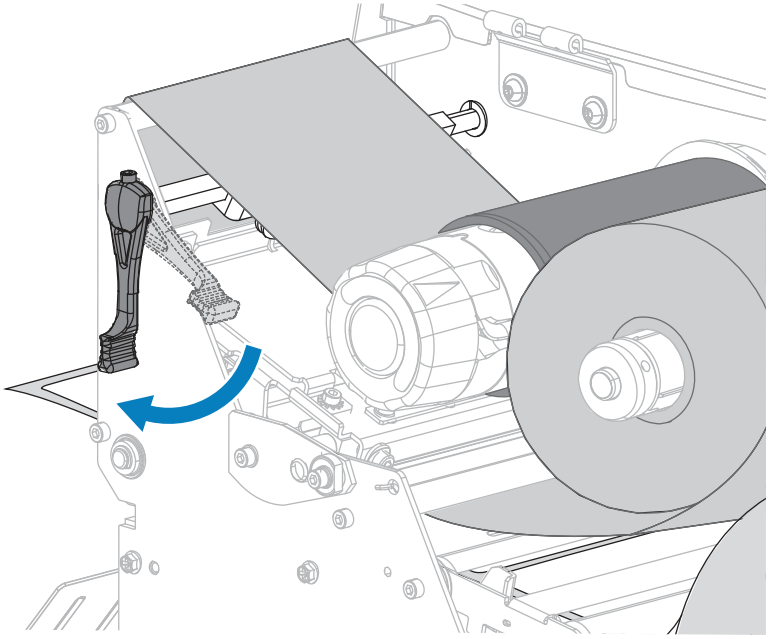 <br>b. Close the media door. |

| If... | Then... |
|---|---|
| | 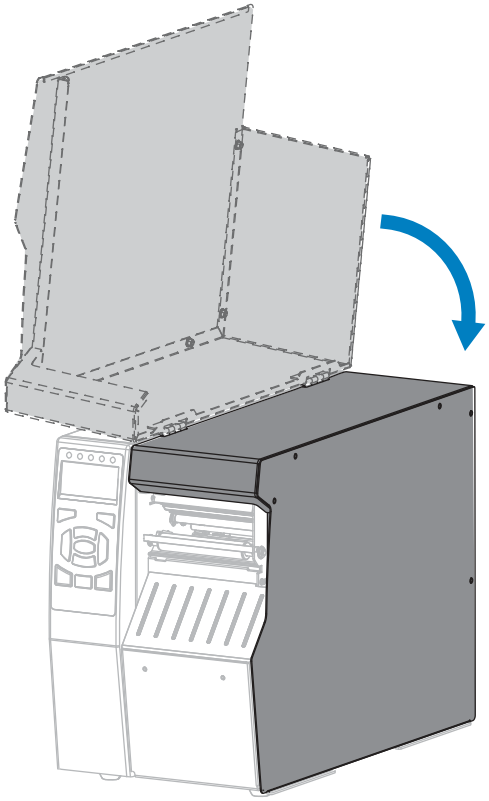 <br>c. If necessary, press **PAUSE** to enable printing. |

## Adding a Printer through Zebra Setup Utilities

If desired, you may use Zebra Setup Utilities to add printers to Windows using this procedure, after installing the drivers.

1. If necessary, install the Zebra Setup Utilities program.
   - **a)** Go to zebra.com/setup and download Zebra Setup Utilities for Windows.
   - **b)** Run the `zsu-xxxxxxx.exe` file that you downloaded.
   - **c)** Follow the prompts in the InstallAware Wizard.
   - **d)** In the final screen of the wizard, click the checkbox next to **Run Zebra Setup Utilities now**, and then click **Finish**.
   - **e)** Follow the prompts in the System Prepare Wizard.

2. If necessary, open the **Zebra Setup Utilities** program.

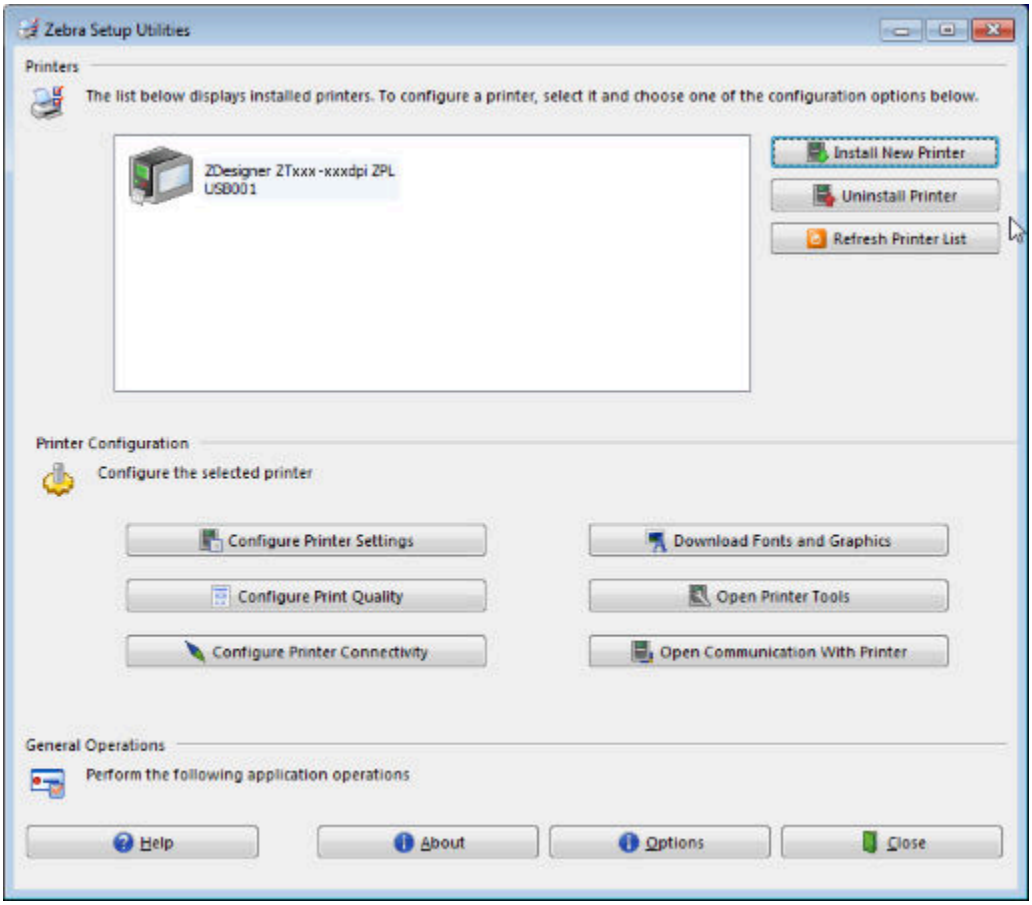

3. Click **Install New Printer**.

   The printer driver wizard displays.

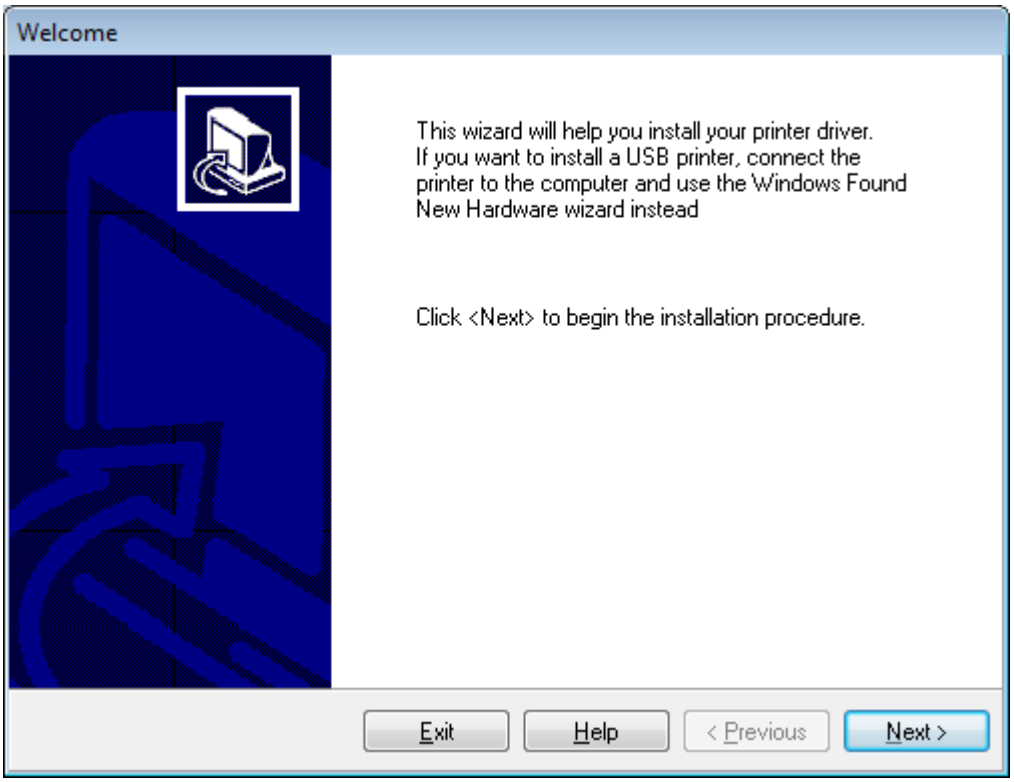

4. Click **Next**.

   You are prompted to select an installation option.

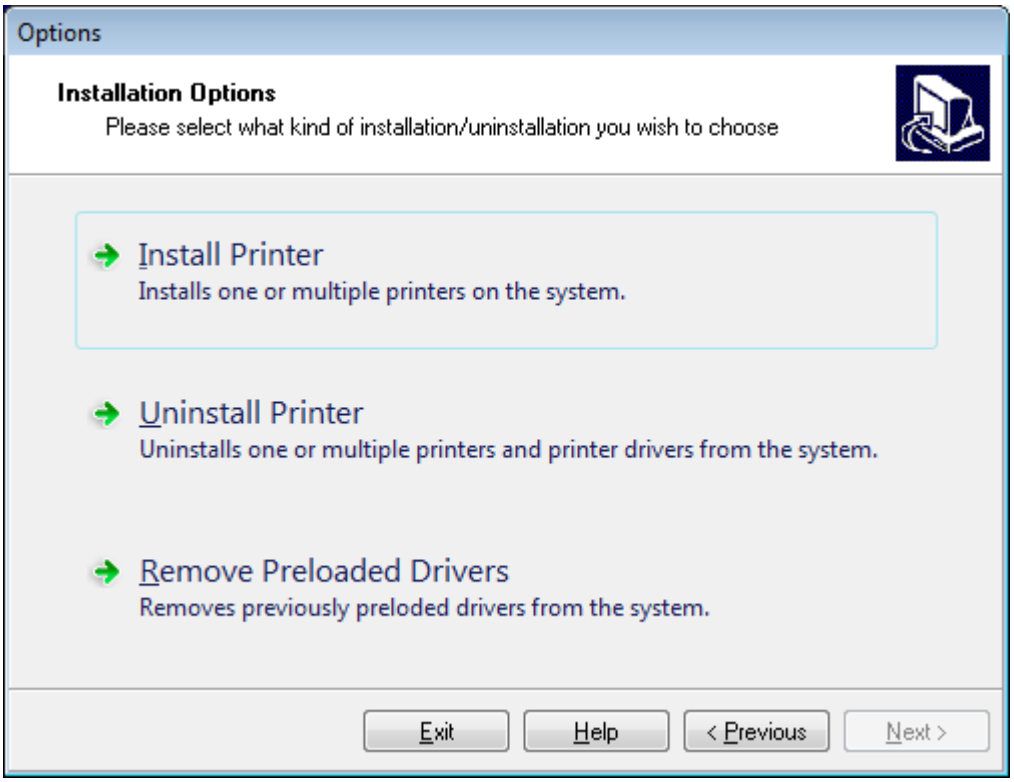

5. Click **Install Printer**.

   You are prompted to select a printer type.

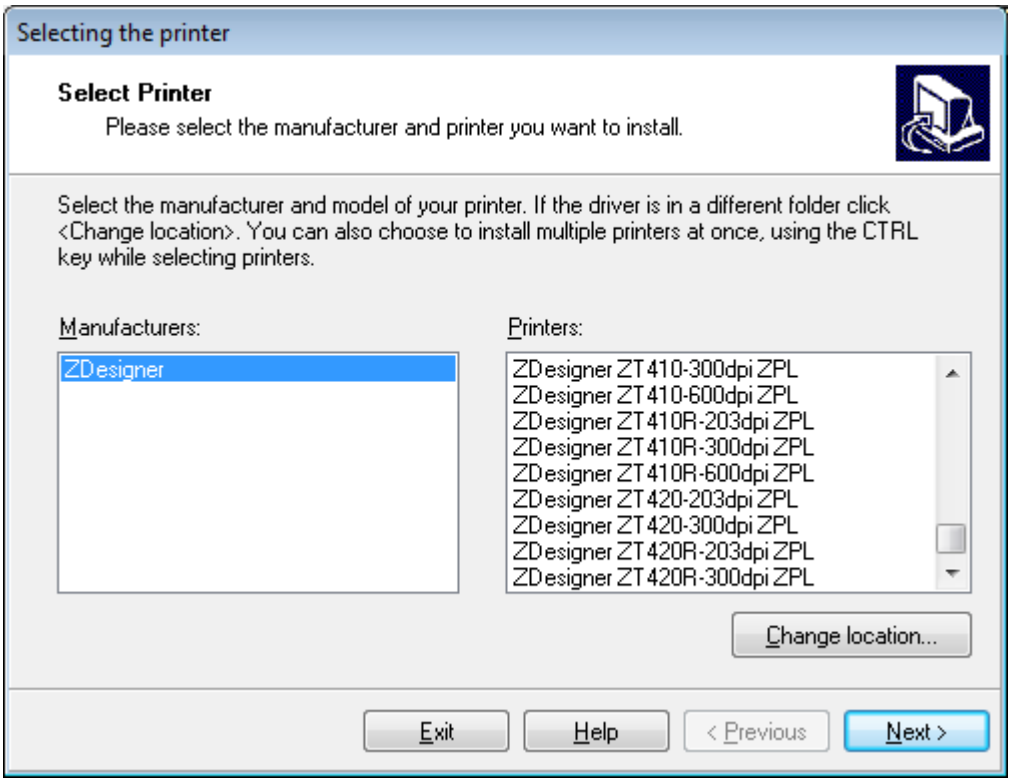


6. Select your printer model and resolution.

   The model and resolution are on a part number sticker on the printer, usually located below the media hanger. The information will be in the following format:

   Part Number: `XXXXXxY – xxxxxxxx`

   where

   `XXXXX` = the printer model

   `Y` = the printer resolution (2 = 203 dpi, 3 = 300 dpi, 6 = 600 dpi)

   For example, in the part number `ZT510x3 – xxxxxxxx`

   `ZT510` indicates that the printer is a ZT510 model

   `3` indicates that the printhead resolution is 300 dpi

7. Click **Next**.

   You are notified that the printer is already installed.

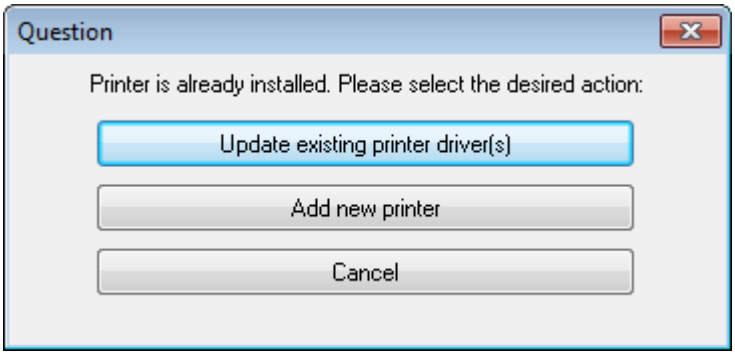


8. Click **Add new printer**.

   You are prompted for a printer name, the port to which the printer will be connected, and the language for the printer display.

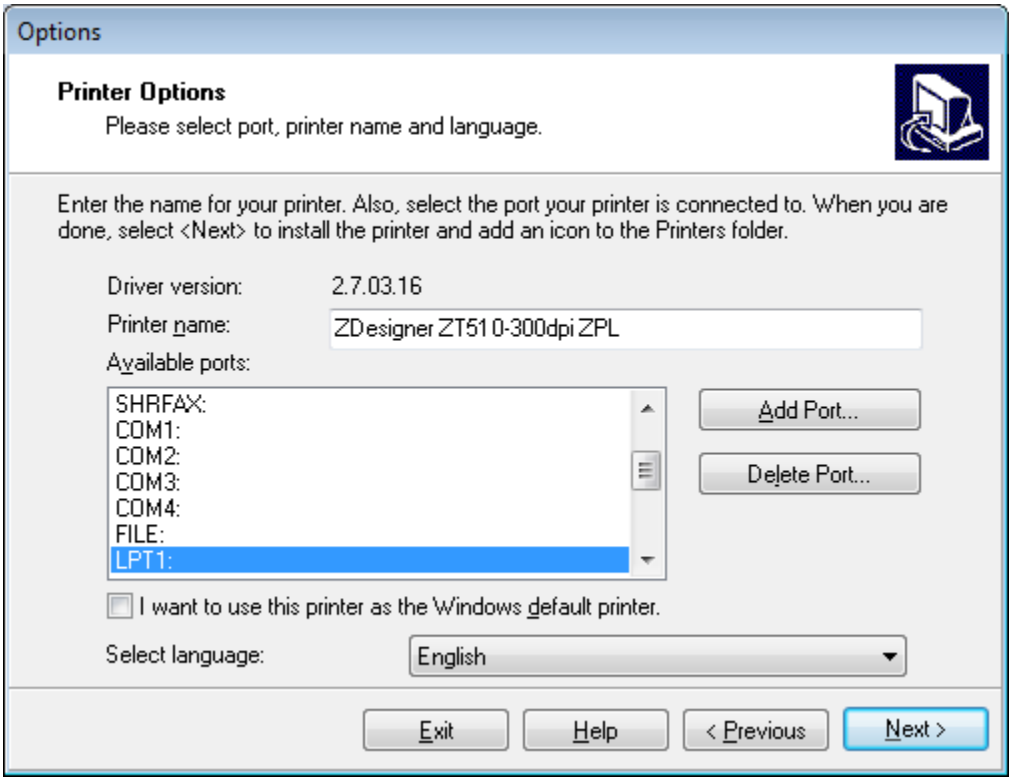

9. Click **Add Port**.

   The wizard prompts you for a name for the port and the IP address of your printer.

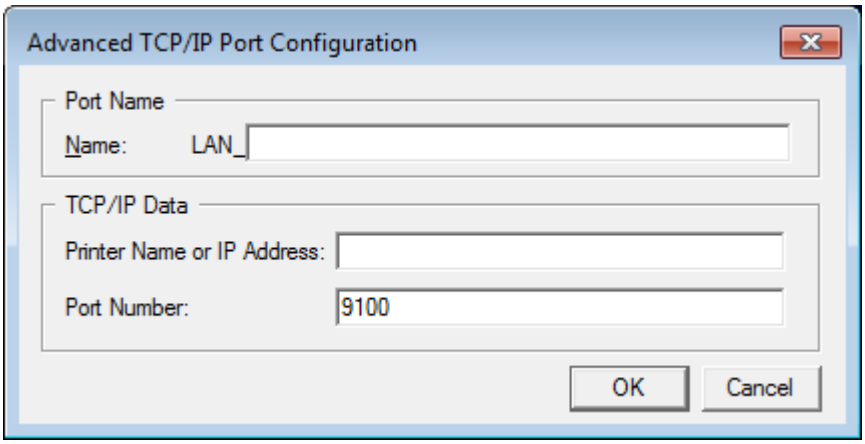


**NOTE:** If you have other applications open, you may be prompted that the driver is locked by another process. You may click **Next** to continue or **Exit** to allow you to save your work before continuing with this installation.

10. Give the port a name that you can recognize when it appears in the list of available ports.

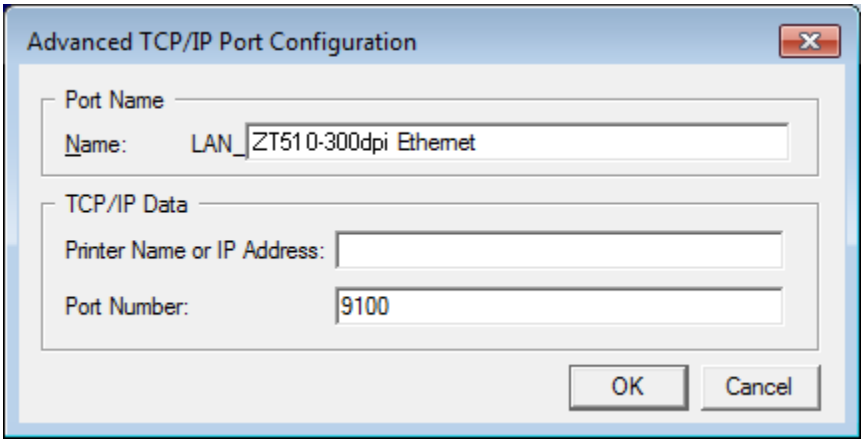


11. Enter the printer's IP address.

    This could be one that was assigned automatically or one that you specified manually in the previous section.

**12.** Click **OK**.

A printer driver is created with the port name that you assigned. The new printer port appears in the list of available ports.

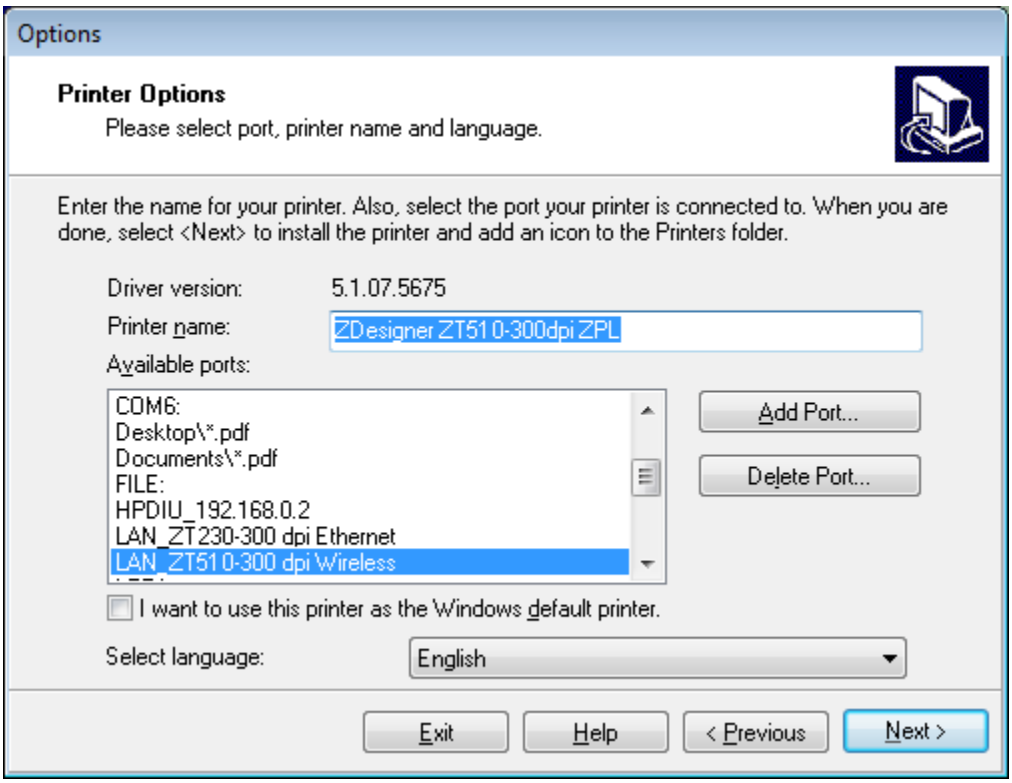

**13.** Click **Next**.

You are prompted to launch other setup wizards.

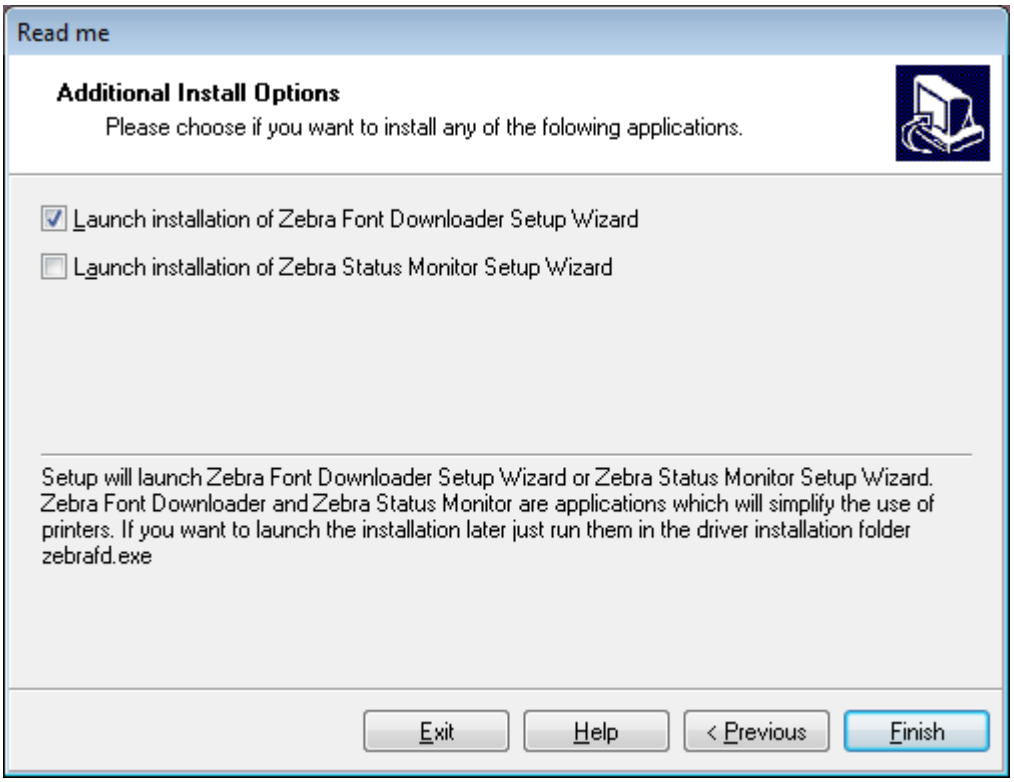

**14.** Check the desired options, and then click **Finish**.

The printer driver is installed. If you are prompted that other programs might be affected, click the appropriate option to continue.

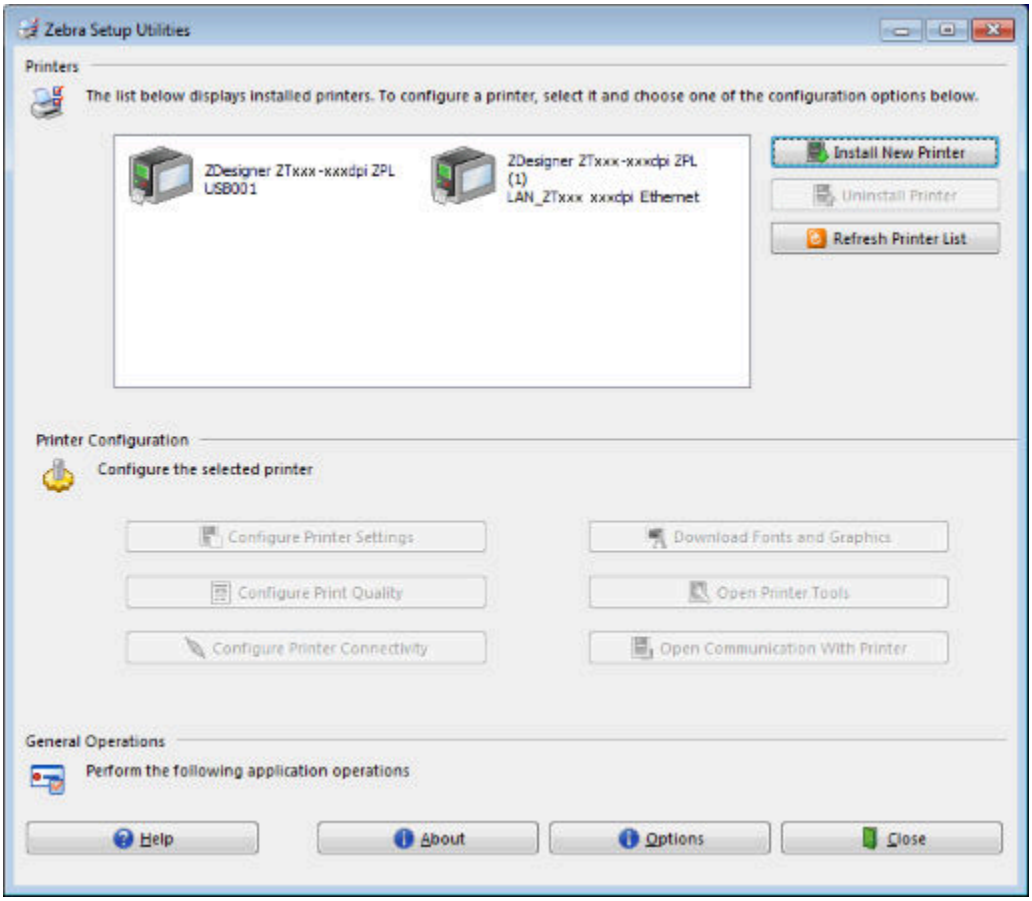


## Printing a Test Label and Making Adjustments

After you have loaded media, loaded ribbon (if using Thermal Transfer mode), installed the printer driver, and connected your printer to your computer, use the directions in this section to print a test label. Printing

this label allows you to see if your connection is working and if you need to adjust any of the printer settings.

1. Open the **Zebra Setup Utilities** to return to the **Zebra Setup Utilities** screen.

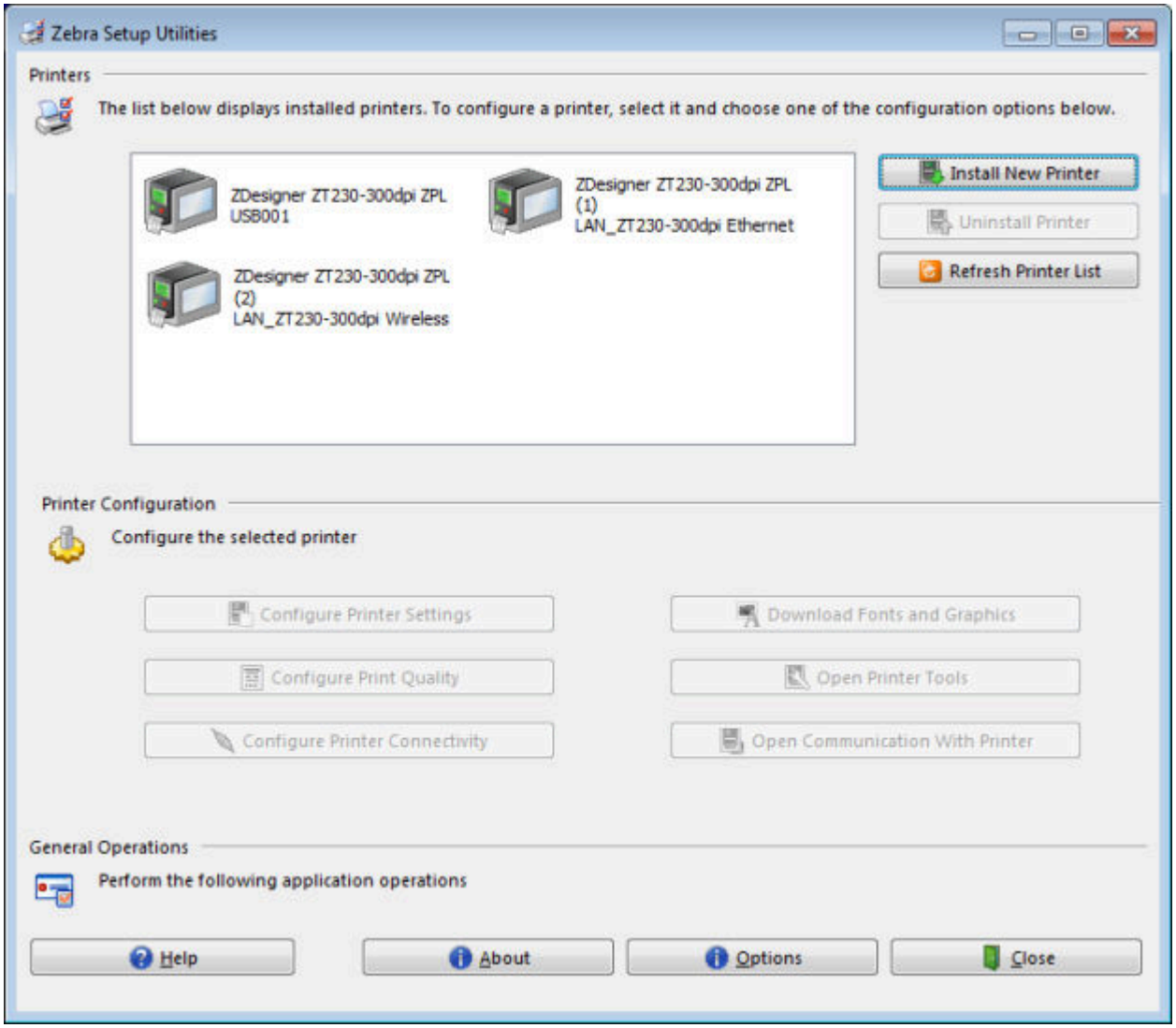


2. Click on one of the available print drivers for your printer.

3. Click **Open Printer Tools**.

   The **Tools** window displays the available printer commands.

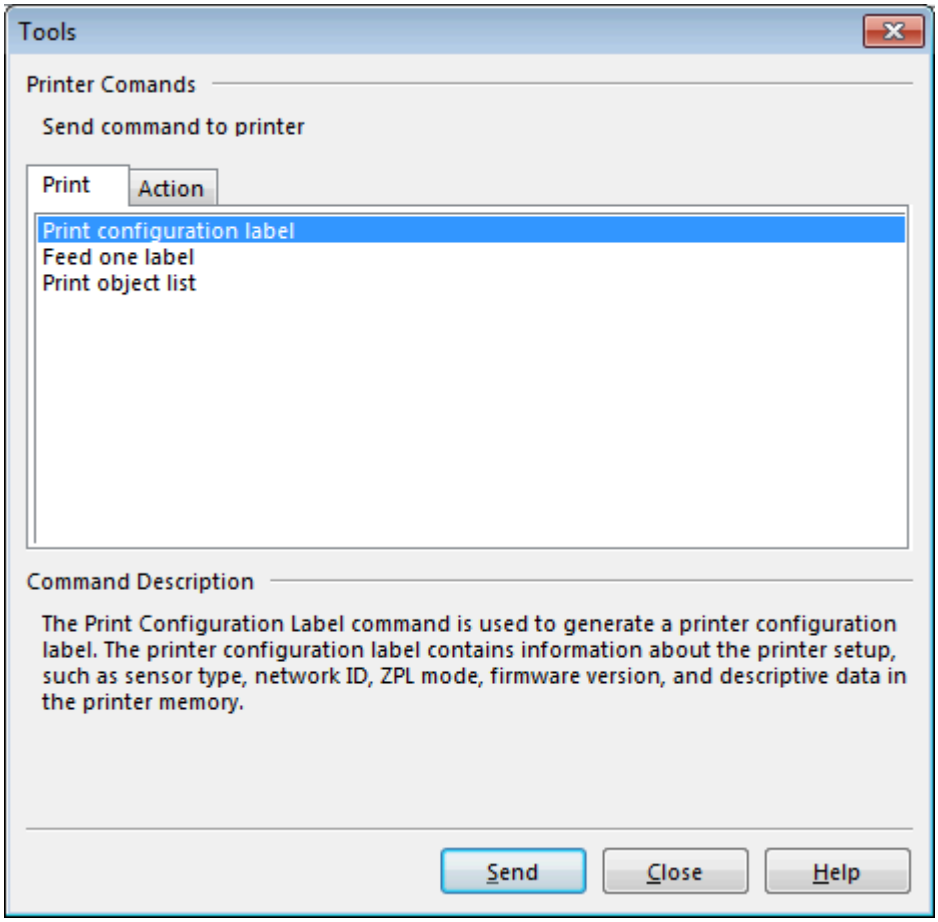

4. Click **Send** to print a printer configuration label.

   If your connection is working correctly and your printer is correctly loaded with media and ribbon (if used), a printer configuration label prints.

   **Figure 5** Sample Printer Configuration Label

```
PRINTER CONFIGURATION

Zebra Technologies
ZTC ZT510-203dpi ZPL
34J163304899

+14.0............... DARKNESS
6.0 IPS............. PRINT SPEED
+000................ TEAR OFF
CUTTER.............. PRINT MODE
CONTINUOUS.......... MEDIA TYPE
TRANSMISSIVE........ SENSOR SELECT
DIRECT-THERMAL...... PRINT METHOD
831................. PRINT WIDTH
2200................ LABEL LENGTH
P1085894/00007 1... PRINT HEAD ID
15.0IN   380MM..... MAXIMUM LENGTH
MAINT. OFF.......... EARLY WARNING
CONNECTED........... USB COMM.
BIDIRECTIONAL....... PARALLEL COMM.
RS232............... SERIAL COMM.
9600................ BAUD
8 BITS.............. DATA BITS
NONE................ PARITY
XON/XOFF............ HOST HANDSHAKE
NONE................ PROTOCOL
NORMAL MODE......... COMMUNICATIONS
<~>  7EH............ CONTROL PREFIX
<^>  5EH............ FORMAT PREFIX
<,>  2CH............ DELIMITER CHAR
ZPL II.............. ZPL MODE
INACTIVE............ COMMAND OVERRIDE
NO MOTION........... MEDIA POWER UP
LENGTH.............. HEAD CLOSE
DEFAULT............. BACKFEED
+000................ LABEL TOP
+0000............... LEFT POSITION
DISABLED............ REPRINT MODE
039................. WEB SENSOR
088................. MEDIA SENSOR
255................. TAKE LABEL
027................. MARK SENSOR
027................. MARK MED SENSOR
008................. TRANS GAIN
029................. TRANS BASE
100................. TRANS LED
004................. MARK GAIN
100................. MARK LED
DPCSWFXM............ MODES ENABLED
.................... MODES DISABLED
 832 8/MM FULL...... RESOLUTION
4.0................. LINK-OS VERSION
V80.20.03 <-........ FIRMWARE
1.3 ................ XML SCHEMA
6.6.0 22.88......... HARDWARE ID
32768k...........R: RAM
524288k..........E: ONBOARD FLASH
NONE................ FORMAT CONVERT
FW VERSION.......... IDLE DISPLAY
06/19/17............ RTC DATE
14:13............... RTC TIME
ENABLED............. ZBI
2.1 ................ ZBI VERSION
READY............... ZBI STATUS
223 LABELS.......... NONRESET CNTR
223 LABELS.......... RESET CNTR1
223 LABELS.......... RESET CNTR2
909 IN.............. NONRESET CNTR
909 IN.............. RESET CNTR1
909 IN.............. RESET CNTR2
2,308 CM............ NONRESET CNTR
2,308 CM............ RESET CNTR1
2,308 CM............ RESET CNTR2
001 WIRELESS........ SLOT 1
*** EMPTY........... SLOT 2
FIRMWARE IN THIS PRINTER IS COPYRIGHTED
```

5. Did the label print, and was it of acceptable print quality?

| If... | Then... |
|---|---|
| The label printed and the print quality is acceptable | Your printer is ready for printing. Continue with the label designer program of your choice. You may use ZebraDesigner™, which you can download from zebra.com. |
| The label did not print | **a.** Close the Tools window and make sure that you selected the correct printer driver before you click Open Printer Tools. Try printing the label again.<br>**b.** If the label still did not print, check the connections between the printer and your computer or the printer and your network. |

| If... | Then... |
|---|---|
| The label prints, but with poor quality or other issues | See Diagnostics and Troubleshooting on page 174 for instructions. |

# Installing Label Design Software

Select and install the software that you will use to create label formats for your printer.

One option is ZebraDesigner, which you can download from zebra.com/zebradesigner. You can choose to use ZebraDesigner Essentials for free or purchase ZebraDesigner Professional for a more robust toolset.

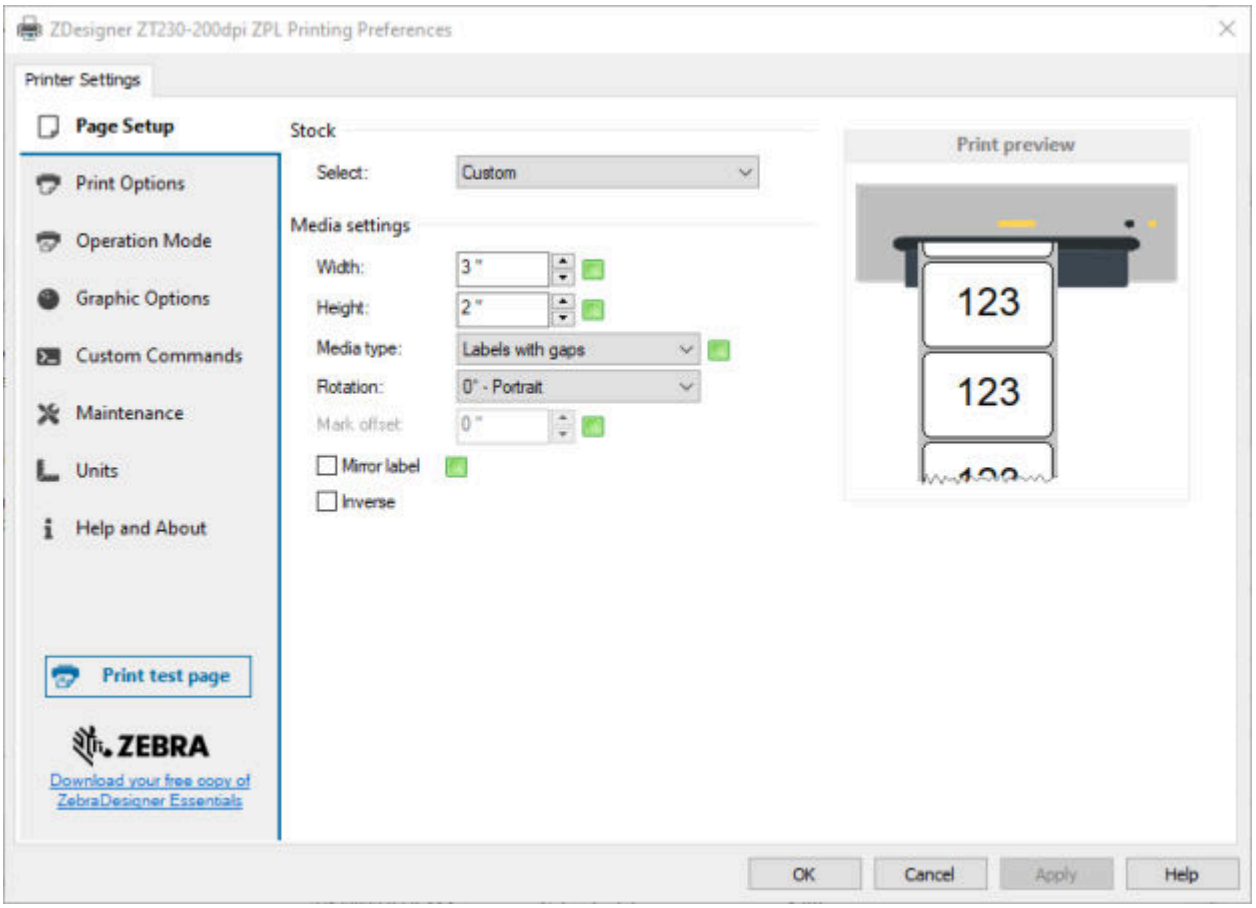


## ZebraDesigner System Requirements

- 32-bit or 64-bit Windows 10 desktop editions, Windows 11 desktop editions, Windows Server 2016, Windows Server 2019, Windows Server 2022 operating systems.
- CPU: Intel or compatible x86 family processor
- Memory: 2 GB or more RAM
- Hard drive: 1 GB of available disk space
- Microsoft .NET Framework Version 4.7.2

- Display: 1366 × 768 or higher resolution monitor
- ZDesigner printer drivers

Remote Desktop Services and Virtual Machines are not supported.

# Printer Configuration and Adjustment

This section assists you with configuration of and adjustments to the printer.

## Changing Printer Settings through the User Menus

This section presents the printer settings that you can change and identifies the tools for changing them.

**NOTE:** For printers purchased in the EMEA region after August 1, 2025, certain connectivity options are disabled by default. To enable these options, refer to the Zebra Link-OS PrintSecure Printer Administration Guide.

These tools include the following:

- The printer's user menus. See the information that follows in this section.
- ZPL and Set/Get/Do (SGD) commands. See the Zebra® Programming Guide for more information.
- The printer's web pages when the printer has an active wired or wireless print server connection. See the ZebraNet Wired and Wireless Print Servers User Guide for more information.

Copies of the referenced manuals are available at zebra.com/manuals.

The following are the printer's user menus and the menu items that appear in each. For navigation instructions, see Navigating the Display Screens on page 13.

### SETTINGS

- DARKNESS
- PRINT SPEED
- MEDIA TYPE
- PRINT METHOD
- TEAR OFF
- PRINT WIDTH
- PRINT MODE
- LABEL TOP
- LEFT POSITION
- REPRINT MODE
- LABEL LENGTH MAX
- LANGUAGE**
- TOOLS MENU*

### TOOLS

- PRINT INFORMATION**
- IDLE DISPLAY
- POWER UP ACTION
- HEAD CLOSE ACTION
- LOAD DEFAULTS
- MEDIA/RIBBON CAL**
- DIAGNOSTIC MODE
- ENERGY STAR
- CONFIG INFO TO USB
- ZBI ENABLED?
- RUN ZBI PROGRAM
- STOP ZBI PROGRAM
- PRINT USB FILE
- COPY USB FILE TO E:
- STORE E: FILE TO USB
- PRINT STATION
- PASSWORD PROTECT
- PRINT TEST FORMAT
- NETWORK MENU*

### NETWORK

- ACTIVE PRINT SERVER
- PRIMARY NETWORK
- WIRED IP ADDRESS
- WIRED SUBNET MASK
- WIRED GATEWAY
- WIRED IP PROTOCOL
- WIRED MAC ADDRESS
- WLAN IP ADDRESS
- WLAN SUBNET MASK
- WLAN GATEWAY
- WLAN IP PROTOCOL
- WLAN MAC ADDRESS
- ESSID
- CHANNEL
- SIGNAL
- IP PORT
- IP ALTERNATE PORT
- PRINT INFORMATION**
- RESET NETWORK
- VISIBILITY AGENT
- LOAD DEFAULTS
- RFID MENU*

### RFID

NOT SUPPORTED

### LANGUAGE

- LANGUAGE**
- COMMAND LANGUAGE
- COMMAND CHAR
- CONTROL CHAR
- DELIMITER CHAR
- ZPL MODE
- VIRTUAL DEVICE
- SENSORS MENU*

### SENSORS

- SENSOR TYPE
- MEDIA/RIBBON CAL**
- PRINT INFORMATION**
- LABEL SENSOR
- TAKE LABEL
- PORTS MENU*

### PORTS

- BAUD RATE
- DATA BITS
- PARITY
- HOST HANDSHAKE
- WML
- BLUETOOTH MENU*

### BLUETOOTH

- BLUETOOTH ADDRESS
- MODE
- DISCOVERY
- CONNECTED
- BT SPEC VERSION
- MIN SECURITY MODE
- SETTINGS MENU*

* Denotes a shortcut to the next user menu.

** Appears in multiple user menus for your convenience.

## DARKNESS

Set the darkness to the lowest setting that provides good print quality. If you set the darkness too high, the label image may print unclearly, bar codes may not scan correctly, the ribbon may burn through, or the printhead may wear prematurely

If desired, use the FEED Self Test on page 180 to determine the optimal darkness setting.

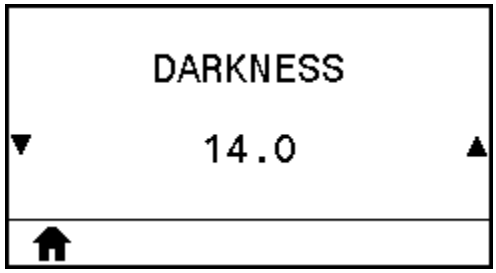


| | |
|---|---|
| User menu item: | **Home Menu** > SETTINGS |
| Accepted values: | 0.0 – 30.0 |
| Related ZPL command(s): | `^MD, ~SD` |
| SGD command used: | `print.tone` |
| Printer web page: | **View and Modify Printer Settings** > **General Setup** > **Darkness** |

## PRINT SPEED

Select the speed, in inches per second (ips), for printing a label. Slower print speeds typically yield better print quality.

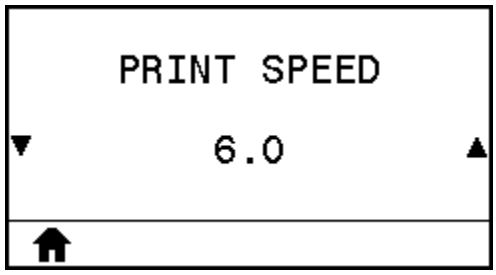


| | |
|---|---|
| User menu item: | **Home Menu** > SETTINGS |
| Accepted values: | 203 dpi = 2 to 12 ips<br>300 dpi = 2 to 10 ips |
| Related ZPL command(s): | `^PR` |
| SGD command used: | `media.speed` |

## MEDIA TYPE

Select the type of media that you are using.

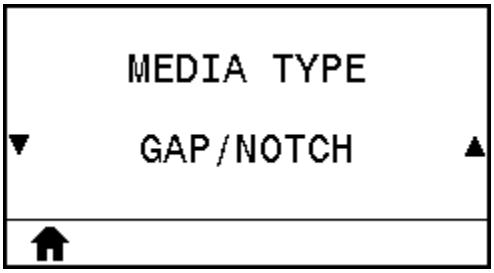


| | |
|---|---|
| User menu item: | **Home Menu** > SETTINGS |
| Accepted values: | • CONTINUOUS<br>• GAP/NOTCH<br>• MARK<br>If you select CONTINUOUS, you must include a label length in your label format (`^LL` if you are using ZPL). |
| Related ZPL command(s): | `^MN` |
| SGD command used: | `ezpl.media_type` |
| Printer web page: | **View and Modify Printer Settings** > **Media Setup** > **Media Type** |

## PRINT METHOD

Specify if the printer is to use Direct Thermal mode (no ribbon) or Thermal Transfer mode (using thermal transfer media and ribbon).

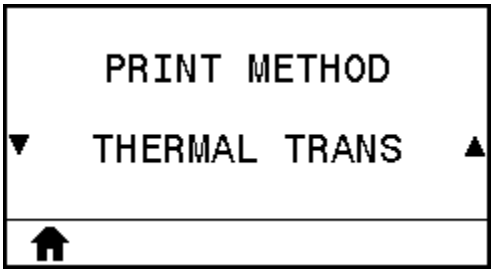


| | |
|---|---|
| User menu item: | **Home Menu** > SETTINGS |
| Accepted values: | • THERMAL TRANS<br>• DIRECT THERMAL |
| Related ZPL command(s): | `^MT` |

| | |
|---|---|
| SGD command used: | `ezpl.print_method` |
| Printer web page: | **View and Modify Printer Settings** > **Media Setup** > **Print Method** |

## TEAR OFF

If necessary, adjust the position of the media over the tear-off bar after printing.

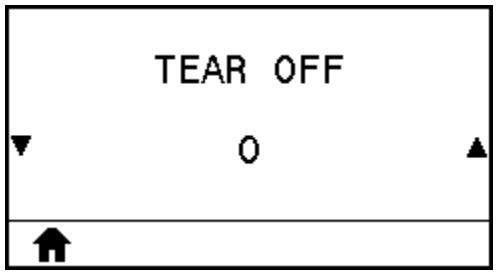


- Higher numbers move the media out (the tear line moves closer to the leading edge of the next label).
- Lower numbers move the media in (the tear line moves closer to the edge of the label just printed).

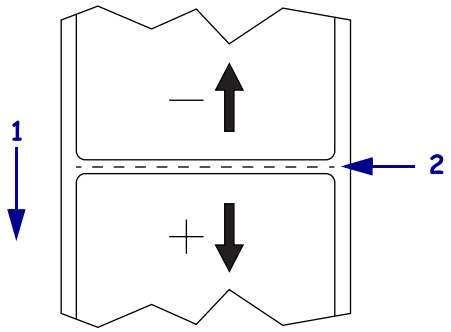


| | |
|---|---|
| 1 | Media direction |
| 2 | Factory-set tear line location at position 000 |

| | |
|---|---|
| User menu item: | **Home Menu** > SETTINGS |
| Accepted values: | –120 to 120 |
| Related ZPL command(s): | `^TA` |
| SGD command used: | `ezpl.tear_off` |
| Printer web page: | **View and Modify Printer Settings** > **General Setup** > **Tear Off** |

## PRINT WIDTH

Specify the width of the labels being used, in dots. The default value is the maximum width for the printer, based on the printhead's DPI value.

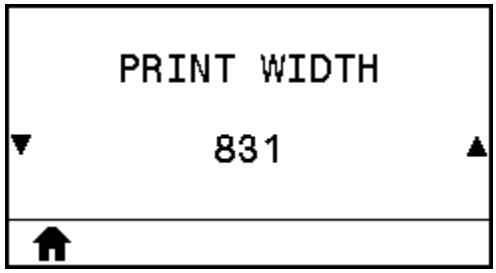


| | |
|---|---|
| User menu item: | **Home Menu** > SETTINGS |
| Accepted values: | 203 dpi = 0002 to 832<br>300 dpi = 0002 to 1248<br>**NOTE:** Setting the width too narrow can result in portions of a label format not being printed on the media. Setting the width too wide wastes formatting memory and can cause the printer to print off of the label and onto the platen roller. This setting can affect the horizontal position of the label format if the image was inverted using the `^POI` ZPL II command. |
| Related ZPL command(s): | `^PW` |
| SGD command used: | `ezpl.print_width` |
| Printer web page: | **View and Modify Printer Settings** > **General Setup** > **Print Width** |

## PRINT MODE

Select a print mode that is compatible with your printer options.

For information about how the print mode selections work with different printer options, see Select a Print Mode on page 43.

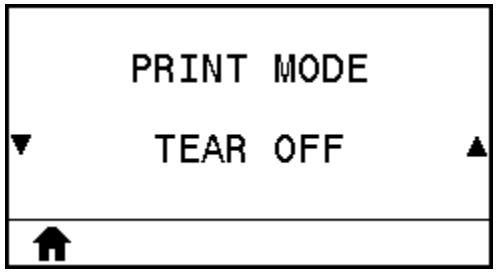


| | |
|---|---|
| User menu item: | **Home Menu** > SETTINGS |
| Accepted values: | • TEAR OFF |

| | |
|---|---|
| | • PEEL-OFF<br>• REWIND<br>• CUTTER<br>• DELAYED CUT<br>• LINERLESS PEEL<br>• LINERLESS WIND<br>• LINERLESS TEAR<br>• APPLICATOR |
| Related ZPL command(s): | `^MM` |
| SGD command used: | `MEDIA.printMODE` |
| Printer web page: | **View and Modify Printer Settings** > **General Setup** > **Print Mode** |

## LABEL TOP

If necessary, shift the position of the image vertically on the label.

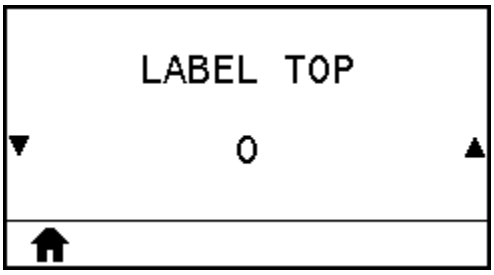


- Negative numbers move the image higher on the label (toward the printhead).
- Positive numbers move the image farther down on the label (away from the printhead) by the specified number of dots.

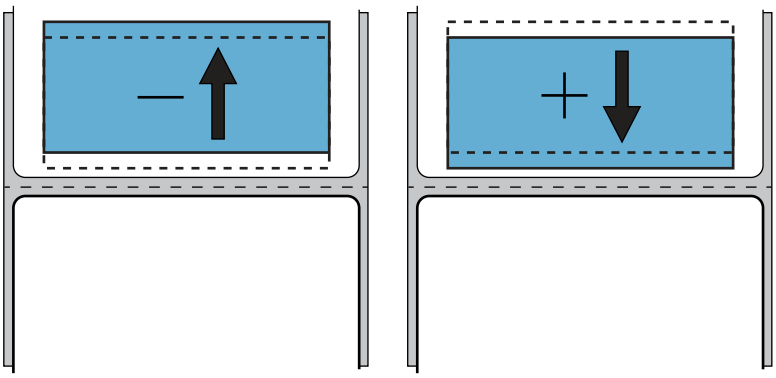

| | |
|---|---|
| User menu item: | **Home Menu** > SETTINGS |

| | |
|---|---|
| Accepted values: | –120 to +120 |
| Related ZPL command(s): | `^LT` |
| SGD command used: | `media.printmode` |
| Printer web page: | **View and Modify Printer Settings** > **General Setup** > **Print Mode** |

## LEFT POSITION

If necessary, shift the position of the image horizontally on the label.

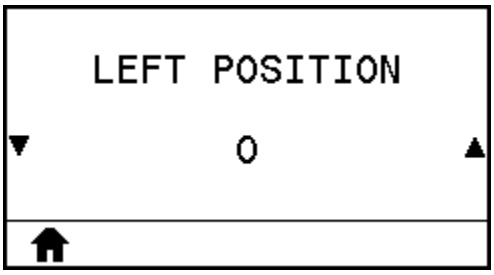


- Negative numbers move the left edge of the image toward the left edge of the label by the number of dots selected.
- Positive numbers move the edge of the image toward the right edge of the label.

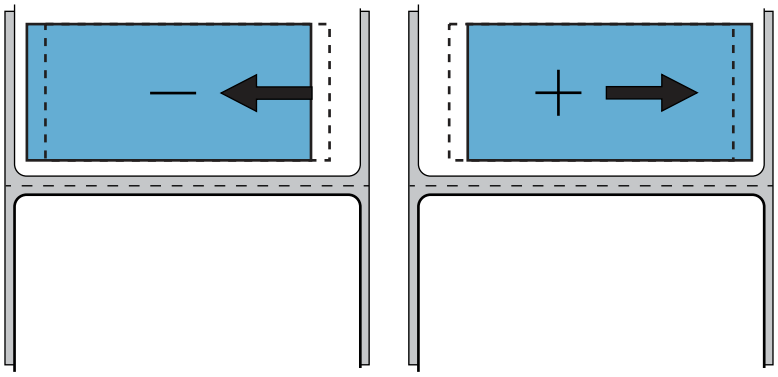

| | |
|---|---|
| User menu item: | **Home Menu** > SETTINGS |
| Accepted values: | –9999 to 9999 |
| Related ZPL command(s): | `^LS` |
| SGD command used: | `zpl.left_position` |
| Printer web page: | **View and Modify Printer Settings** > **Advanced Setup** > **Left Position** |

## REPRINT MODE

When reprint mode is enabled, you can reprint the last label printed by pressing the DOWN ARROW when at the printer's Idle Display.

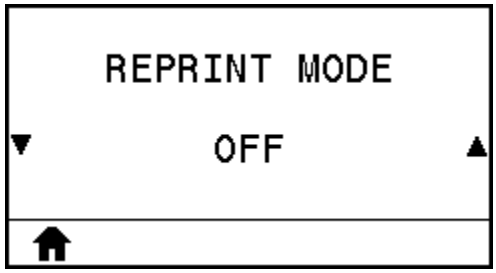


| | |
|---|---|
| User menu item: | **Home Menu** > SETTINGS |
| Accepted values: | • ON<br>• OFF |
| Related ZPL command(s): | `^JZ` |
| SGD command used: | `ezpl.reprint_mode` |

## LABEL LENGTH MAX

Set a maximum label length that is at least 25.4 mm (1.0 in.) greater than the actual label length plus the interlabel gap. If you set this value too small, the printer assumes that continuous media is loaded and cannot calibrate.

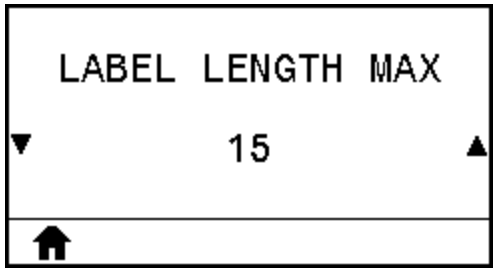


| | |
|---|---|
| User menu item: | **Home Menu** > SETTINGS |
| Accepted values: | **IMPORTANT:** Specify a value that is at least 25.4 mm (1.0 in.) greater than the actual label length plus the interlabel gap. If you set the value to one that is smaller than the label length, the printer assumes that continuous media is loaded, and the printer cannot calibrate.<br>For example, if the label length is 152 mm (6.0 in.) including the interlabel gap, set the parameter for at least 178 mm (7.0 in.). |

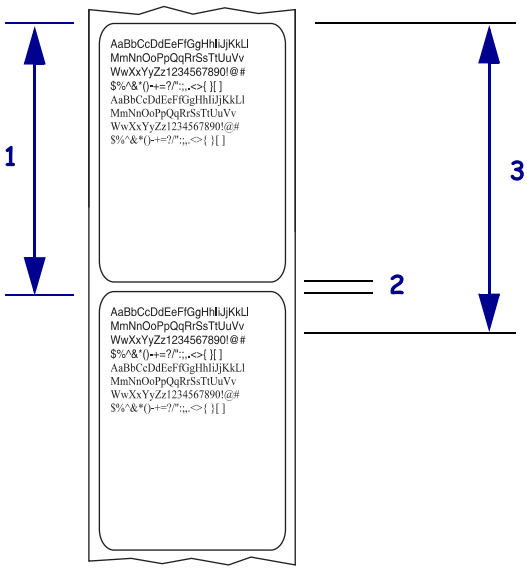


| | |
|---|---|
| 1 | Label length (including interlabel gap) |
| 2 | Interlabel gap |
| 3 | Set the maximum label length to approximately this value |

| | |
|---|---|
| Related ZPL command(s): | `^ML` |
| SGD command used: | `ezpl.label_length_max` |
| Printer web page: | **View and Modify Printer Settings** > **Media Setup** > **Maximum Length** |

## PRINT INFORMATION

Print the specified information on one or more labels. This menu item is available through three user menus with different default values for each.

**Figure 6** TOOLS Menu

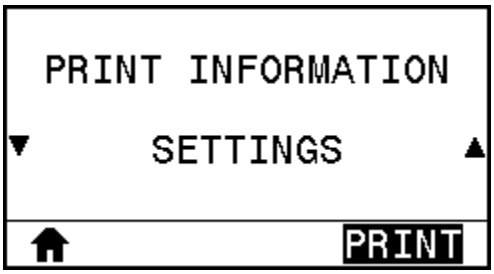

**Figure 7** NETWORK Menu

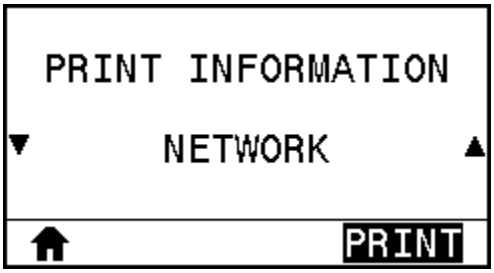


**Figure 8** SENSOR Menu

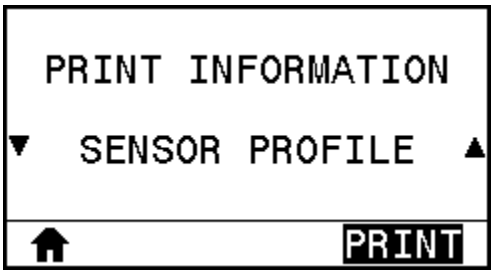


| | |
|---|---|
| User menu item: | **Home Menu** > SETTINGS |
| Accepted values: | • SETTINGS—prints the printer configuration label.<br>• NETWORK—prints the settings for any print server that is installed.<br>• FORMATS—prints the available formats stored in the printer's RAM, Flash memory, or optional memory card.<br>• IMAGES—prints the available images stored in the printer's RAM, Flash memory, or optional memory card.<br>• FONTS—prints the available fonts in the printer, including standard printer fonts plus any optional fonts. Fonts may be stored in RAM or Flash memory.<br>• BARCODES—prints the available bar codes in the printer. Bar codes may be stored in RAM or Flash memory.<br>• ALL—prints the previous six labels.<br>• SENSOR PROFILE—shows the sensor settings compared to actual sensor readings. To interpret the results, see Sensor Profile on page 182. |
| Related ZPL command(s): | SETTINGS: `~WC`<br>NETWORK: `~WL`<br>SENSOR PROFILE: `~JG`<br>Others: `^WD` |
| Control panel key(s): | SETTINGS and NETWORK: Do one of the following:<br>• Hold **CANCEL** during printer power-up.<br>• Hold **FEED** + **CANCEL** for 2 seconds when the printer is in the Ready state. |

| | |
|---|---|
| | SENSOR PROFILE: Hold **FEED** + **CANCEL** during printer power-up. |
| Printer web page: | **View and Modify Printer Settings** > **Print Listings on Label** |

**Figure 9** Sample Printer Configuration Label

```
        PRINTER CONFIGURATION

Zebra Technologies
ZTC ZT510-203dpi ZPL
34J163304899

+14.0............... DARKNESS
6.0 IPS............. PRINT SPEED
+000................ TEAR OFF
CUTTER.............. PRINT MODE
CONTINUOUS.......... MEDIA TYPE
TRANSMISSIVE........ SENSOR SELECT
DIRECT-THERMAL...... PRINT METHOD
831................. PRINT WIDTH
2200................ LABEL LENGTH
P1085894/00007 1... PRINT HEAD ID
15.0IN   380MM..... MAXIMUM LENGTH
MAINT. OFF.......... EARLY WARNING
CONNECTED........... USB COMM.
BIDIRECTIONAL....... PARALLEL COMM.
RS232............... SERIAL COMM.
9600................ BAUD
8 BITS.............. DATA BITS
NONE................ PARITY
XON/XOFF............ HOST HANDSHAKE
NONE................ PROTOCOL
NORMAL MODE......... COMMUNICATIONS
<~>  7EH............ CONTROL PREFIX
<^>  5EH............ FORMAT PREFIX
<,>  2CH............ DELIMITER CHAR
ZPL II.............. ZPL MODE
INACTIVE............ COMMAND OVERRIDE
NO MOTION........... MEDIA POWER UP
LENGTH.............. HEAD CLOSE
DEFAULT............. BACKFEED
+000................ LABEL TOP
+0000............... LEFT POSITION
DISABLED............ REPRINT MODE
039................. WEB SENSOR
088................. MEDIA SENSOR
255................. TAKE LABEL
027................. MARK SENSOR
027................. MARK MED SENSOR
008................. TRANS GAIN
029................. TRANS BASE
100................. TRANS LED
004................. MARK GAIN
100................. MARK LED
DPCSWFXM............ MODES ENABLED
.................... MODES DISABLED
 832 8/MM FULL..... RESOLUTION
4.0................. LINK-OS VERSION
V80.20.03 <-........ FIRMWARE
1.3................. XML SCHEMA
6.6.0 22.89........ HARDWARE ID
32768k...........R: RAM
524288k..........E: ONBOARD FLASH
NONE................ FORMAT CONVERT
FW VERSION.......... IDLE DISPLAY
06/19/17............ RTC DATE
14:13............... RTC TIME
ENABLED............. ZBI
2.1................. ZBI VERSION
READY............... ZBI STATUS
223 LABELS.......... NONRESET CNTR
223 LABELS.......... RESET CNTR1
223 LABELS.......... RESET CNTR2
909 IN.............. NONRESET CNTR
909 IN.............. RESET CNTR1
909 IN.............. RESET CNTR2
2,308 CM............ NONRESET CNTR
2,308 CM............ RESET CNTR1
2,308 CM............ RESET CNTR2
001 WIRELESS........ SLOT 1
*** EMPTY........... SLOT 2
FIRMWARE IN THIS PRINTER IS COPYRIGHTED
```

**Figure 10** Sample Network Configuration Label

```
        Network Configuration

Zebra Technologies
ZTC ZT510-203dpi ZPL
34J163304899

Wired............... PRIMARY NETWORK
PrintServer........ LOAD LAN FROM?
INTERNAL WIRED..... ACTIVE PRINTSRVR

Wired*
ALL................ IP PROTOCOL
192.168.000.002.... IP ADDRESS
255.255.255.000.... SUBNET
192.168.000.254.... GATEWAY
000.000.000.000.... WINS SERVER IP
YES................ TIMEOUT CHECKING
300................ TIMEOUT VALUE
000................ ARP INTERVAL
9100............... BASE RAW PORT
9200............... JSON CONFIG PORT

Wireless
ALL................ IP PROTOCOL
000.000.000.000.... IP ADDRESS
255.255.255.000.... SUBNET
000.000.000.000.... GATEWAY
000.000.000.000.... WINS SERVER IP
YES................ TIMEOUT CHECKING
300................ TIMEOUT VALUE
000................ ARP INTERVAL
9100............... BASE RAW PORT
9200............... JSON CONFIG PORT
INSERTED........... CARD INSERTED
02dfH.............. CARD MFG ID
9134H.............. CARD PRODUCT ID
00:00:00:00:00:00.. MAC ADDRESS
YES................ DRIVER INSTALLED
INFRASTRUCTURE..... OPERATING MODE
125................ ESSID
1.0................ CURRENT TX RATE
OPEN............... WEP TYPE
NONE............... WLAN SECURITY
1................... WEP INDEX
000................ POOR SIGNAL
LONG............... PREAMBLE
NO................. ASSOCIATED
ON................. PULSE ENABLED
15................. PULSE RATE
OFF................ INTL MODE
USA/CANADA......... REGION CODE
USA/CANADA......... COUNTRY CODE
0x7FF.............. CHANNEL MASK

Bluetooth
4.3.1p1............ FIRMWARE
02/13/2015......... DATE
on................. DISCOVERABLE
3.0/4.0............ RADIO VERSION
on................. ENABLED
AC:3F:A4:82:05:9D.. MAC ADDRESS
34J163304899....... FRIENDLY NAME
no................. CONNECTED
1................... MIN SECURITY MODE
nc................. CONN SECURITY MODE
supported.......... iOS

FIRMWARE IN THIS PRINTER IS COPYRIGHTED
```

## IDLE DISPLAY

Select the information shown on the printer's display when the printer is idle.

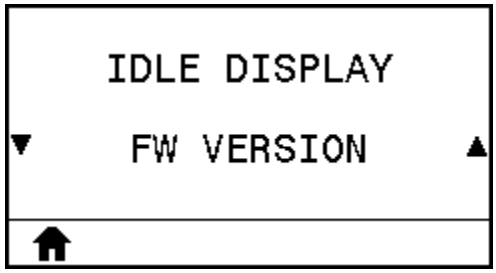


| | |
|---|---|
| User menu item: | **Home Menu** > TOOLS |
| Accepted values: | • FW VERSION<br>• IP ADDRESS<br>• MM/DD/YY 24 HR<br>• MM/DD/YY 12 HR<br>• DD/MM/YY 24 HR<br>• DD/MM/YY 12 HR |
| SGD command used: | `device.idle_display_format`<br>`device.idle_display_value` |

## POWER UP ACTION

Set the action for the printer to take during the power-up sequence.

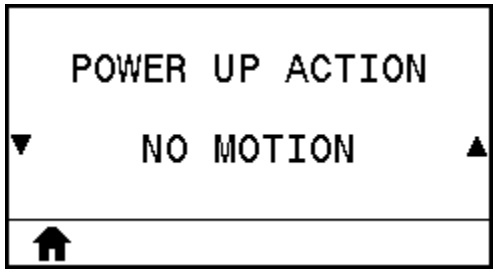


| | |
|---|---|
| User menu item: | **Home Menu** > TOOLS |
| Accepted values: | • CALIBRATE—adjusts sensor levels and thresholds, determines the label length, and feeds the media to the next web.<br>• FEED—feeds the labels to the first registration point.<br>• LENGTH—determines the label length using current sensor values, and feeds the media to the next web. |

| | |
|---|---|
| | • NO MOTION—tells the printer not to move the media. You must manually ensure that the web is positioned correctly, or press feed to position the next web.<br>• SHORT CAL—sets the media and web thresholds without adjusting sensor gain, determines the label length, and feeds the media to the next web. |
| Related ZPL command(s): | `^MF` |
| SGD command used: | `ezpl.power_up_action` |
| Printer web page: | **View and Modify Printer Settings** > **Calibration** |

## HEAD CLOSE ACTION

Set the action for the printer to take when you close the printhead.

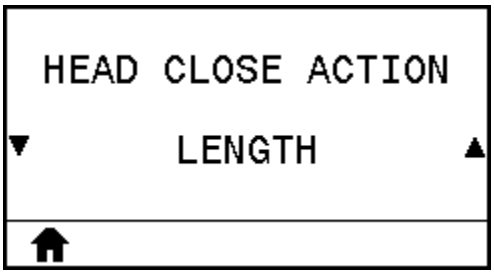


| | |
|---|---|
| User menu item: | **Home Menu** > TOOLS |
| Accepted values: | • CALIBRATE—adjusts sensor levels and thresholds, determines the label length, and feeds the media to the next web.<br>• FEED—feeds the labels to the first registration point.<br>• LENGTH—determines the label length using current sensor values, and feeds the media to the next web.<br>• NO MOTION—tells the printer not to move the media. You must manually ensure that the web is positioned correctly, or press feed to position the next web.<br>• SHORT CAL—sets the media and web thresholds without adjusting sensor gain, determines the label length, and feeds the media to the next web. |
| Related ZPL command(s): | `^MF` |
| SGD command used: | `ezpl.head_close_action` |
| Printer web page: | **View and Modify Printer Settings** > **Calibration** |

## LOAD DEFAULTS

Restore specific printer, print server, and network settings back to the factory defaults. Use care when loading defaults because you will need to reload all settings that you changed manually. This menu item is available through two user menus with different default values for each.

**NOTE:** For printers with Protected Mode enabled, you cannot modify this setting from the front panel. For more information, refer to the Zebra Link-OS PrintSecure Printer Administration Guide.

**Figure 11** TOOLS Menu

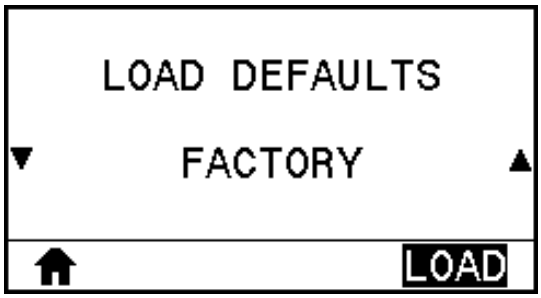


**Figure 12** NETWORK Menu

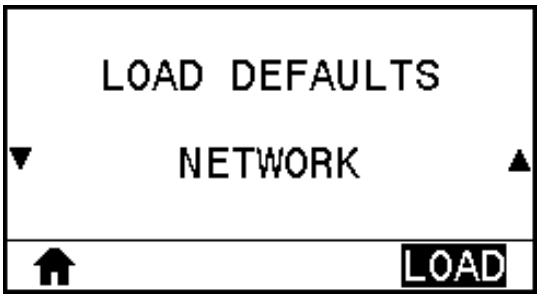


| | |
|---|---|
| User menu item: | **Home Menu** > TOOLS |
| Accepted values: | • FACTORY—Restores all printer settings other than the network settings back to the factory defaults. Use care when loading defaults because you will need to reload all settings that you changed manually.<br>• NETWORK—Reinitializes the printer's wired or wireless print server. With a wireless print server, the printer also reassociates with your wireless network.<br>• LAST SAVED—Loads settings from the last permanent save. |
| Related ZPL command(s): | FACTORY: `^JUF`<br>NETWORK: `^JUN`<br>LAST SAVED: `^JUR` |
| Control panel key(s) | FACTORY: Hold **FEED** + **PAUSE** during printer power-up to reset the printer parameters to factory values.<br>NETWORK: Hold **CANCEL** + **PAUSE** during printer power-up to reset the network parameters to factory values. |
| Printer web page: | FACTORY - **View and Modify Printer Settings** > **Restore Default Configuration**<br>NETWORK - **Print Server Settings** > **Reset Print Server**<br>LAST SAVED - **View and Modify Printer Settings** > **Restore Saved Configuration** |

## MEDIA/RIBBON CAL

Calibrate the printer to adjust the sensitivity of the media and ribbon sensors.

For complete instructions on how to perform a calibration procedure, see Calibrating the Ribbon and Media Sensors on page 140.

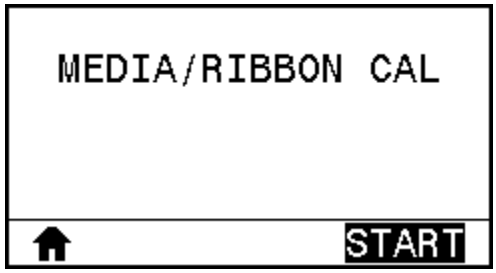


| | |
|---|---|
| User menu item: | **Home Menu** > TOOLS |
| Related ZPL command(s): | `^JC` |
| SGD command used: | `ezpl.manual_calibration` |
| Control panel key(s): | Hold **PAUSE** + **CANCEL** for 2 seconds to initiate calibration. |
| Printer web page: | The calibration procedure cannot be initiated through the web pages. See the following web page for settings that are set during sensor calibration:<br>**View and Modify Printer Settings** > **Calibration**<br>**IMPORTANT:** Do not change these settings unless you are told to do so by Zebra Technical Support or by an authorized service technician. |

## DIAGNOSTIC MODE

Use this diagnostics tool to cause the printer to output the hexadecimal values for all data received by the printer.

For more information, see Communication Diagnostics Test on page 182.

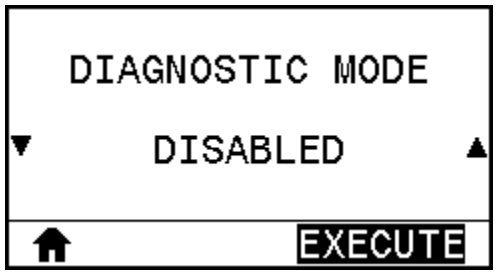


| | |
|---|---|
| User menu item: | **Home Menu** > TOOLS |
| Accepted values: | • DISABLED |

| | |
|---|---|
| | • ENABLED |
| Related ZPL command(s): | `^JD` to enable, `^JE` to disable |
| SGD command used: | `device.diagnostic_print` |
| Control panel key(s): | Hold **PAUSE** + **FEED** for 2 seconds when the printer is in the Ready state. |

## ENERGY STAR

When Energy Star mode is enabled, the printer goes into a “sleep” mode after a timeout period, thereby lowering power consumption. Press any button on the control panel to bring the printer back to an active state.

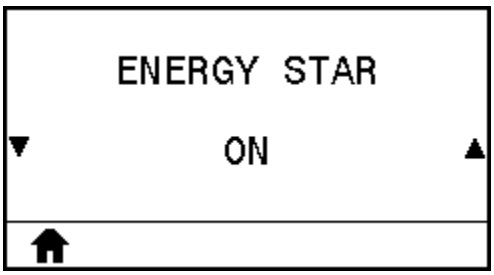


| | |
|---|---|
| User menu item: | **Home Menu** > TOOLS |
| Accepted values: | • ON<br>• OFF |
| SGD command used: | `power.energy_star.enable`<br>`power.energy_star_timeout` (to set the amount of idle time before Energy Star is invoked) |

## CONFIG INFO TO USB

Use this function to copy the printer’s configuration information to a USB mass storage device, such as a USB Flash drive, that is plugged into a USB host port option. This makes the information accessible without having to print physical labels.

To print the information to labels, see PRINT INFORMATION on page 104.

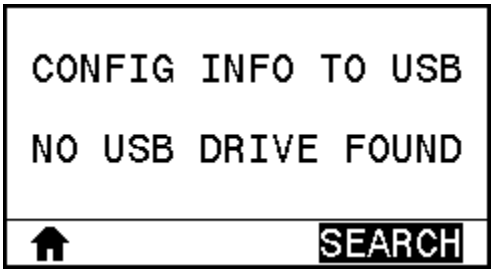

| | |
|---|---|
| User menu item: | **Home Menu** > TOOLS |
| Related ZPL command(s): | `^HH`<br>Returns the printer configuration information returned to the host computer |
| Printer web page: | **Printer Home Page** > **View and Modify Printer Settings** (to view printer configuration information on your web browser)<br>**View and Modify Printer Settings** > **Print Listings on Label** (to print the configuration information on labels) |

## ZBI ENABLED?

Zebra Basic Interpreter (ZBI 2.0™) is a programming option that may be purchased for your printer. If you would like to purchase this option, contact your Zebra reseller for more information.

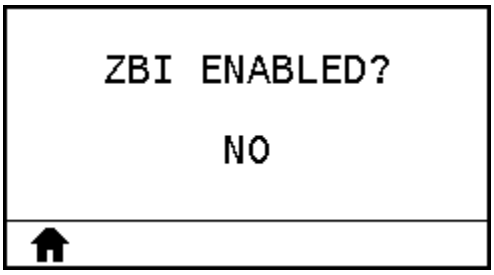


| | |
|---|---|
| User menu item: | **Home Menu** > TOOLS |
| SGD command used: | `zbi.key`<br>(identifies if the ZBI 2.0 option is enabled or disabled on the printer) |

## RUN ZBI PROGRAM

If ZBI programs have been downloaded to your printer, you may select one to run using this menu item. If no program exists on your printer, NONE is listed.

To run a ZBI program that you have downloaded to your printer:

1. Use the UP ARROW or DOWN ARROW to select a file from this menu.
2. Press **RIGHT SELECT** to select **RUN**. If no program exists, the **RUN** option does not perform an action.

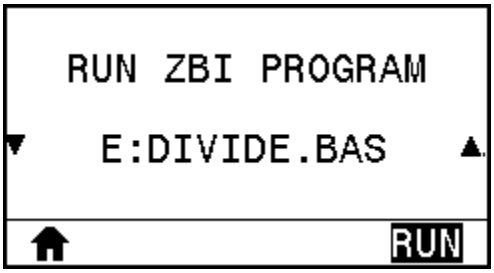

| | |
|---|---|
| User menu item: | **Home Menu** > TOOLS |
| Related ZPL command(s): | `^JI, ~JI` |
| SGD command used: | `zbi.control.run` |
| Printer web page: | **Printer Home Page** > **Directory Listing** |

## STOP ZBI PROGRAM

Use this menu item to stop a ZBI program. The printer lists only programs that are running.

To stop a ZBI program:

1. If necessary, use the UP ARROW or DOWN ARROW to select a file from this menu.
2. Press **RIGHT SELECT** to select **STOP**.

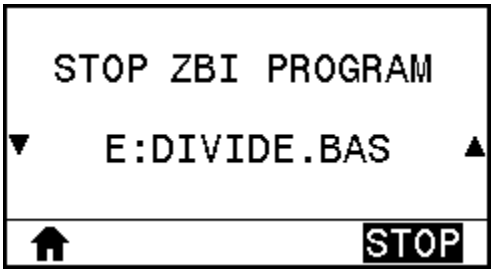


| | |
|---|---|
| User menu item: | **Home Menu** > TOOLS |
| Related ZPL command(s): | `^JQ` |
| SGD command used: | `zbi.control.terminate` |
| Printer web page: | **Printer Home Page** > **Directory Listing** |

## PRINT USB FILE

Select files to print from a USB Flash drive.

See the exercises in Using a USB Host Port and the Print Touch Feature on page 200 for an exercise using this capability.

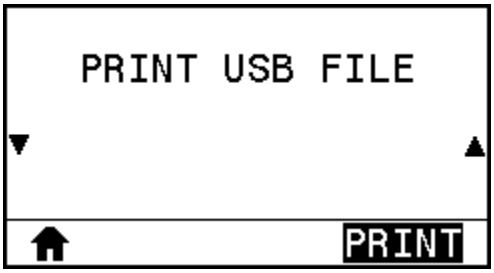

**NOTE:** This menu item can be used only if a USB Flash drive is inserted into an optional USB host port on the printer.

To print files from a USB Flash drive:

1. Insert a USB Flash drive into the printer's USB host port (available as an option).
   a. The printer lists available files. **SELECT ALL** is available to print all available files on the USB Flash drive.
2. Use the UP ARROW or DOWN ARROW to select a file from this menu.
3. Press **RIGHT SELECT** to select **PRINT**.

| | |
|---|---|
| User menu item: | **Home Menu** > TOOLS |
| SGD command used: | `usb.host.read_list` |

## COPY USB FILE TO E:

Select files to copy to the printer from a USB Flash drive.

See the exercises in Using a USB Host Port and the Print Touch Feature on page 200 for an exercise using this capability.

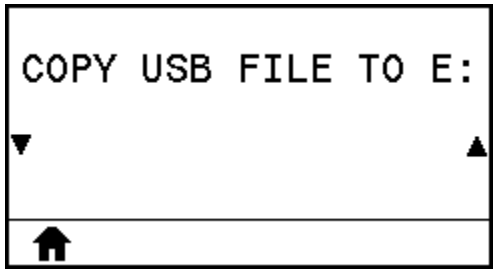


**NOTE:** This menu item can be used only if a USB Flash drive is inserted into an optional USB host port on the printer.

To copy files to the printer from a USB Flash drive:

1. Insert a USB Flash drive into the printer's USB host port (available as an option).
   a. The printer lists available files. **SELECT ALL** is available to print all available files on the USB Flash drive.
2. Use the UP ARROW or DOWN ARROW to select a file from this menu.
3. Press **RIGHT SELECT** to select **STORE**.

| | |
|---|---|
| User menu item: | **Home Menu** > TOOLS |
| SGD command used: | `usb.host.read_list` |

## STORE E: FILE TO USB

Select files from the printer to store on a USB Flash drive.

See the exercises in Using a USB Host Port and the Print Touch Feature on page 200 for an exercise using this capability.

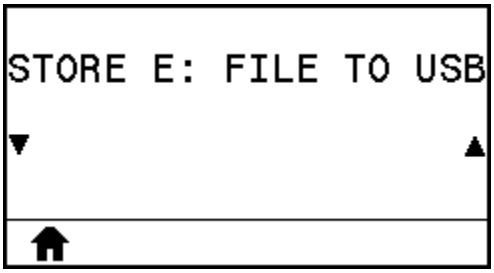


**NOTE:** This menu item can be used only if a USB Flash drive is inserted into an optional USB host port on the printer.

To copy files from the printer to a USB Flash drive:

1. Insert a USB Flash drive into the printer's USB host port (available as an option).
   a. The printer lists available files. **SELECT ALL** is available to store all available files on the USB Flash drive.
2. Use the UP ARROW or DOWN ARROW to select a file from this menu.
3. Press **RIGHT SELECT** to select **STORE**.

| | |
|---|---|
| User menu item: | **Menu** > TOOLS |
| SGD command used: | `usb.host.read_list` |

## PRINT STATION

Use this menu item to fill in variable fields in a label format and print the label using a Human Input Device (HID), such as a USB keyboard, scale, or barcode scanner. A suitable label format must be stored on the E: drive of the printer to use this option.

See the exercises in Using a USB Host Port and the Print Touch Feature on page 200 for an exercise using this capability.

When you plug an HID into one of the printer's USB host ports, use this user menu to select a form on the printer's E: drive. After you have been prompted to fill in each variable `^FN` field on the form, you can specify the desired quantity of labels to print.

For more information about using the `^FN` command or the SGD commands related to this feature, refer to the Zebra Programming Guide. You can download a copy of the manual from zebra.com/manuals/.

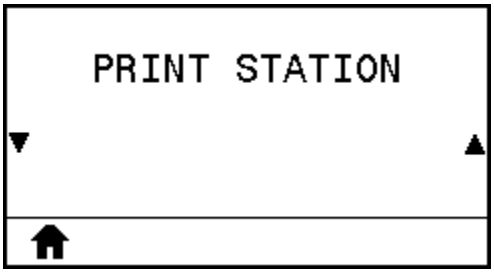


| | |
|---|---|
| User menu item: | **Home Menu** > TOOLS |
| SGD command used: | `usb.host.keyboard_input`(must be set to ON)<br>`usb.host.template_list`<br>`usb.host.fn_field_list`<br>`usb.host.fn_field_data`<br>`usb.host.fn_last_field`<br>`usb.host.template_print_amount` |

## PASSWORD PROTECT

Select the level of password protection for user menu items.

**For printers purchased in the EMEA region after August 1, 2025:** The Protected Mode password and the front panel password/PIN are initially undefined and must be set before they can be used. For additional information, go to zebra.com/asr.

**For all other printers:** The default printer password is `1234`.

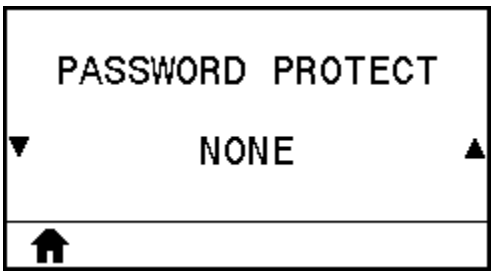


| | |
|---|---|
| User menu item: | **Home Menu** > TOOLS |
| Related ZPL command(s): | `^KP`<br>(to change the printer password) |

## PRINT TEST FORMAT

Use this menu option to initiate test sequences that print specific types of labels to help you troubleshoot printing issues.

See Print Test Format Option on page 176 for samples of the labels and additional information.

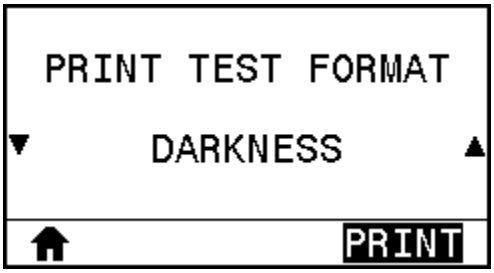


| | |
|---|---|
| User menu item: | **Home Menu** > TOOLS |
| Accepted values: | • DARKNESS—Runs a repeated image in incrementing darkness levels.<br>• FIRST DOT LOCATION—Identifies the first dot location and label top to assist you with adjusting the position of the label.<br>• PRINT LINE—Initiates a test sequence. For more information, see PRINT LINE on page 178.*<br>• IMAGE COMPRESSION—Prints an image with lines and circles to assist with issues regarding compression or stretching of an image.<br>• ELEMENT OUT—Prints a horizontal image designed to show if a printhead element is not functioning. |
| SGD command used: | `print.troubleshooting_label_choices` (specifies the type of label)<br>`print.troubleshooting_label_print` (prints the label) |
| Control panel key(s): | As an alternate way to initiate the PRINT LINE test sequence, reboot the printer while holding PAUSE. Hold PAUSE until the first control panel light turns off. (Formerly called a PAUSE self test.)* |

* This test sequence prints a large number of labels. For additional information, see PRINT LINE on page 178.

## ACTIVE PRINT SERVER

View whether the wired or wireless print server is currently active.

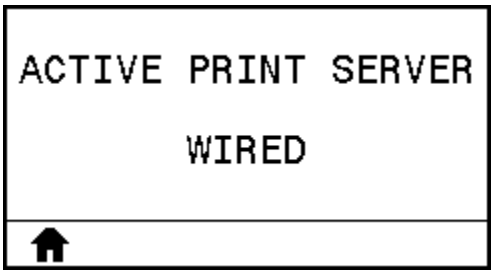


| | |
|---|---|
| User menu item: | **Home Menu** > NETWORK |

## PRIMARY NETWORK

View or modify whether the wired or wireless print server is considered primary. You may select which one is primary.

**NOTE:** For printers with Protected Mode enabled, you cannot modify this setting from the front panel. For more information, refer to the Zebra Link-OS PrintSecure Printer Administration Guide.

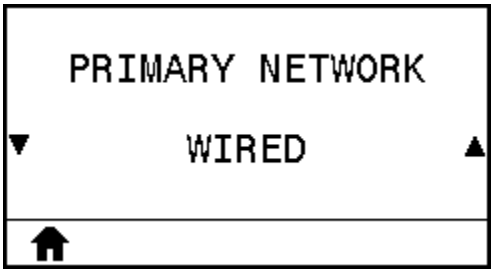


| | |
|---|---|
| User menu item: | **Home Menu** > NETWORK |

## WIRED IP ADDRESS

View and, if necessary, change the printer's wired IP address.

**NOTE:** For printers with Protected Mode enabled, you cannot modify this setting from the front panel. For more information, refer to the Zebra Link-OS PrintSecure Printer Administration Guide.

To save changes to this setting, set WIRED IP PROTOCOL on page 122 to PERMANENT, and then reset the print server (see RESET NETWORK on page 128).

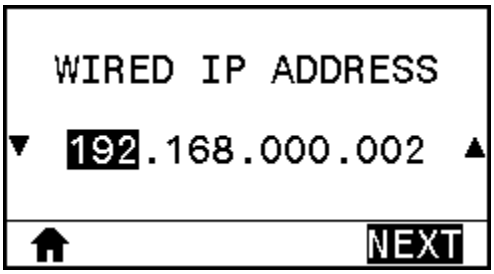


| | |
|---|---|
| User menu item: | **Home Menu** > NETWORK |
| Accepted values: | 000 to 255 for each field |
| Related ZPL command(s): | `^ND` |
| SGD command used: | `internal_wired.ip.addr` |
| Printer web page: | **View and Modify Printer Settings** > **Network Communications Setup** > **TCP/IP Settings** |

## WIRED SUBNET MASK

View and, if necessary, change the wired subnet mask.

**NOTE:** For printers with Protected Mode enabled, you cannot modify this setting from the front panel. For more information, refer to the Zebra Link-OS PrintSecure Printer Administration Guide.

To save changes to this setting, set WIRED IP PROTOCOL on page 122 to PERMANENT, and then reset the print server (see RESET NETWORK on page 128).

See changing IP Address in Miscellaneous Issues on page 197.

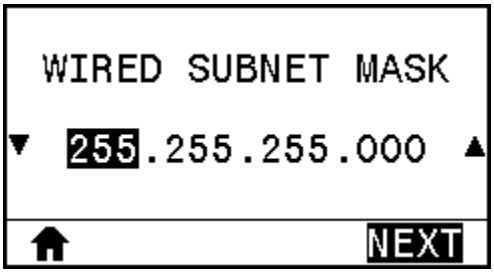


| | |
|---|---|
| User menu item: | **Home Menu** > NETWORK |
| Accepted values: | 000 to 255 for each field |
| Related ZPL command(s): | `^ND` |
| SGD command used: | `internal_wired.ip.netmask` |
| Printer web page: | **View and Modify Printer Settings** > **Network Communications Setup** > **TCP/IP Settings** |

## WIRED GATEWAY

View and, if necessary, change the default wired gateway.

**NOTE:** For printers with Protected Mode enabled, you cannot modify this setting from the front panel. For more information, refer to the Zebra Link-OS PrintSecure Printer Administration Guide.

To save changes to this setting, set WIRED IP PROTOCOL on page 122 to PERMANENT, and then reset the print server (see RESET NETWORK on page 128). See changing IP Address in Miscellaneous Issues on page 197.

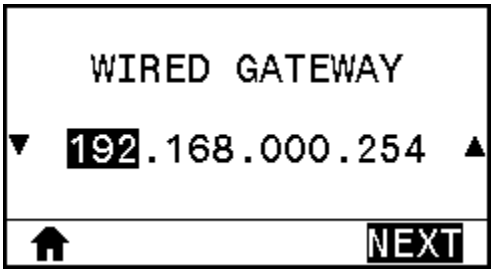

| | |
|---|---|
| User menu item: | **Home Menu** > NETWORK |
| Accepted values: | 000 to 255 for each field |
| Related ZPL command(s): | `^ND` |
| SGD command used: | `internal_wired.ip.gateway` |
| Printer web page: | **View and Modify Printer Settings** > **Network Communications Setup** > **TCP/IP Settings** |

## WIRED IP PROTOCOL

This parameter indicates if the user (permanent) or the server (dynamic) selects the wired print server's IP address. When a dynamic option is chosen, this parameter tells the method(s) by which this print server receives the IP address from the server.

**NOTE:** For printers with Protected Mode enabled, you cannot modify this setting from the front panel. For more information, refer to the Zebra Link-OS PrintSecure Printer Administration Guide.

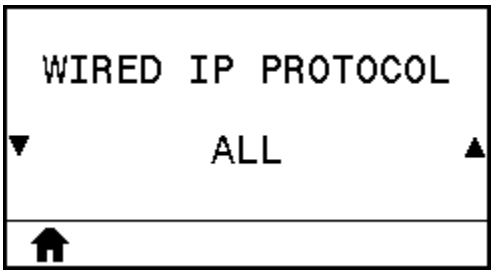


| | |
|---|---|
| User menu item: | **Home Menu** > NETWORK |
| Accepted values: | • ALL<br>• GLEANING ONLY<br>• RARP<br>• BOOTP<br>• DHCP<br>• DHCP & BOOTP<br>• PERMANENT |
| Related ZPL command(s): | `^ND` |
| SGD command used: | `internal_wired.ip.protocol` |
| Printer web page: | **View and Modify Printer Settings** > **Network Communications Setup** > **TCP/IP Settings** |

## WIRED MAC ADDRESS

View the Media Access Control (MAC) address of the wired print server

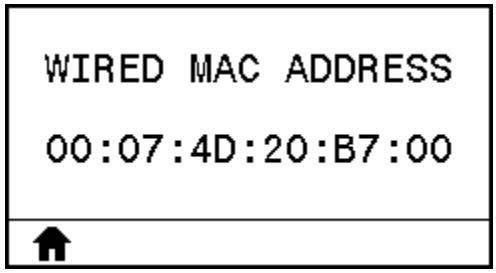


| | |
|---|---|
| User menu item: | **Home Menu** > NETWORK |
| SGD command used: | `internal_wired.mac_addr` |
| Printer web page: | **View and Modify Printer Settings** > **Network Communications Setup** > **TCP/IP Settings** |

## WLAN IP ADDRESS

View and, if necessary, change the printer's wireless IP address.

**NOTE:** For printers with Protected Mode enabled, you cannot modify this setting from the front panel. For more information, refer to the Zebra Link-OS PrintSecure Printer Administration Guide.

To save changes to this setting, set WLAN IP PROTOCOL on page 125 to PERMANENT, and then reset the print server (see RESET NETWORK on page 128).

| | |
|---|---|
| User menu item: | **Home Menu** > NETWORK |
| Accepted values: | 000 to 255 for each field |
| Related ZPL command(s): | `^ND` |
| SGD command used: | `ip.addr`, `wlan.ip.addr` |
| Printer web page: | **View and Modify Printer Settings** > **Network Communications Setup** > **Wireless Setup** |

## WLAN SUBNET MASK

View and, if necessary, change the wireless subnet mask.

**NOTE:** For printers with Protected Mode enabled, you cannot modify this setting from the front panel. For more information, refer to the Zebra Link-OS PrintSecure Printer Administration Guide.

To save changes to this setting, set WLAN IP PROTOCOL on page 125 to PERMANENT, and then reset the print server (see RESET NETWORK on page 128).

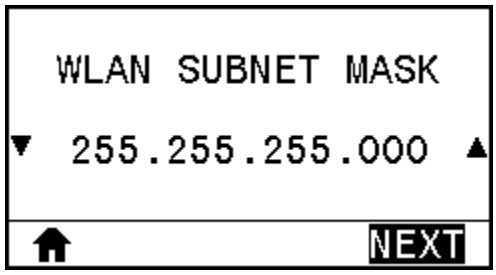


| | |
|---|---|
| User menu item: | **Home Menu** > NETWORK |
| Accepted values: | 000 to 255 for each field |
| Related ZPL command(s): | `^ND` |
| SGD command used: | `wlan.ip.netmask` |
| Printer web page: | **View and Modify Printer Settings** > **Network Communications Setup** > **Wireless Setup** |

## WLAN GATEWAY

View and, if necessary, change the default wireless gateway.

**NOTE:** For printers with Protected Mode enabled, you cannot modify this setting from the front panel. For more information, refer to the Zebra Link-OS PrintSecure Printer Administration Guide.

To save changes to this setting, set WLAN IP PROTOCOL on page 125 to PERMANENT, and then reset the print server (see RESET NETWORK on page 128).

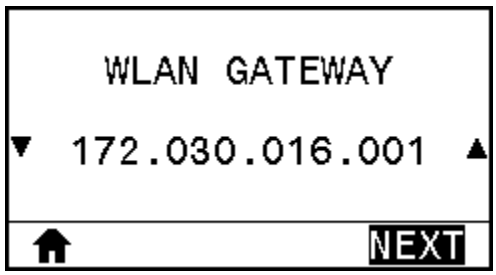


| | |
|---|---|
| User menu item: | **Home Menu** > NETWORK |

| | |
|---|---|
| Accepted values: | 000 to 255 for each field |
| Related ZPL command(s): | `^ND` |
| SGD command used: | `wlan.ip.gateway` |
| Printer web page: | **View and Modify Printer Settings** > **Network Communications Setup** > **Wireless Setup** |

## WLAN IP PROTOCOL

This parameter indicates if the user (permanent) or the server (dynamic) selects the wireless print server's IP address. When a dynamic option is chosen, this parameter tells the method(s) by which this print server receives the IP address from the server.

**IMPORTANT:** You must reset the print server to allow changes to the network settings to take effect.

**NOTE:** For printers with Protected Mode enabled, you cannot modify this setting from the front panel. For more information, refer to the Zebra Link-OS PrintSecure Printer Administration Guide.

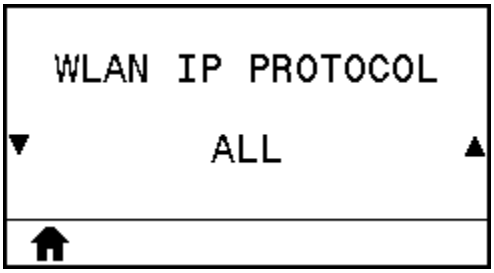


| | |
|---|---|
| User menu item: | **Home Menu** > NETWORK |
| Accepted values: | • ALL<br>• GLEANING ONLY<br>• RARP<br>• BOOTP<br>• DHCP<br>• DHCP & BOOTP<br>• PERMANENT |
| Related ZPL command(s): | `^ND` |
| SGD command used: | `wlan.ip.protocol` |
| Printer web page: | **View and Modify Printer Settings** > **Network Communications Setup** > **Wireless Setup** |

## WLAN MAC ADDRESS

View the Media Access Control (MAC) address of the wireless print server.

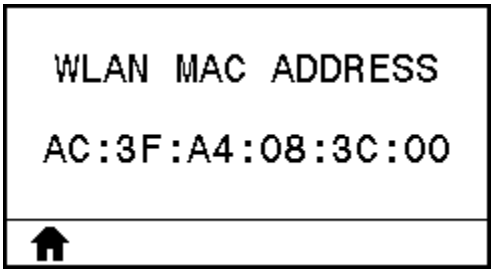


| | |
|---|---|
| User menu item: | **Home Menu** > NETWORK |
| SGD command used: | `wlan.mac_addr` |
| Printer web page: | **View and Modify Printer Settings** > **Network Communications Setup** > **Wireless Setup** |

## ESSID

The Extended Service Set Identification (ESSID) is an identifier for your wireless network. This setting, which cannot be modified from the control panel, gives the ESSID for the current wireless configuration.

**NOTE:** For printers with Protected Mode enabled, you cannot modify this setting from the front panel. For more information, refer to the Zebra Link-OS PrintSecure Printer Administration Guide.

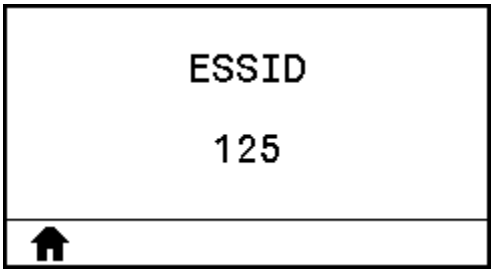


| | |
|---|---|
| User menu item: | **Home Menu** > NETWORK |
| Accepted values: | 32-character alphanumeric string (default 125) |
| SGD command used: | `wlan.essid` |
| Printer web page: | **View and Modify Printer Settings** > **Network Communications Setup** > **Wireless Setup** |

## CHANNEL

View the wireless channel being used when the wireless network is active and authenticated.

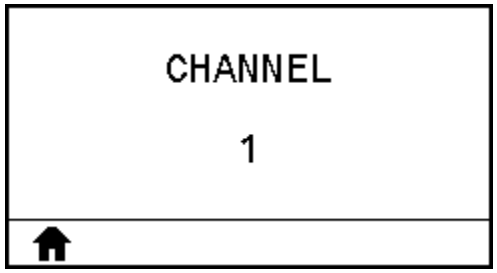


| | |
|---|---|
| User menu item: | **Home Menu** > NETWORK |
| SGD command used: | `wlan.channel` |
| Printer web page: | **View and Modify Printer Settings** > **Network Communications Setup** > **Wireless Setup** |

## SIGNAL

View the wireless signal strength when the wireless network is active and authenticated.

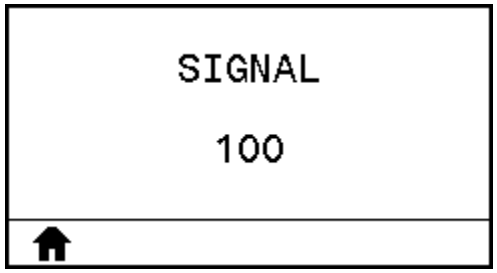


| | |
|---|---|
| User menu item: | **Home Menu** > NETWORK |
| SGD command used: | `wlan.signal_strength` |
| Printer web page: | **View and Modify Printer Settings** > **Network Communications Setup** > **Wireless Setup** |

## IP PORT

This printer setting refers to the internal wired print servers port number that the TCP print service is listening on. Normal TCP communications from the host should be directed to this port.

**NOTE:** For printers with Protected Mode enabled, you cannot modify this setting from the front panel. For more information, refer to the Zebra Link-OS PrintSecure Printer Administration Guide.

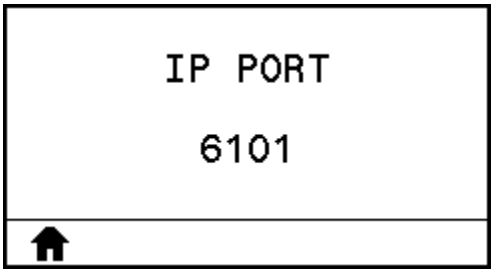


| | |
|---|---|
| User menu item: | **Home Menu** > NETWORK |
| SGD command used: | `ip.port` |
| Printer web page: | **View and Modify Printer Settings** > **Network Communications Setup** > **Wireless Setup** |

## IP ALTERANTE PORT

This command sets the port number of the alternate TCP port.

**NOTE:** Print servers supporting this command will monitor both the primary port and the alternate port for connections at the same time.

**NOTE:** For printers with Protected Mode enabled, you cannot modify this setting from the front panel. For more information, refer to the Zebra Link-OS PrintSecure Printer Administration Guide.

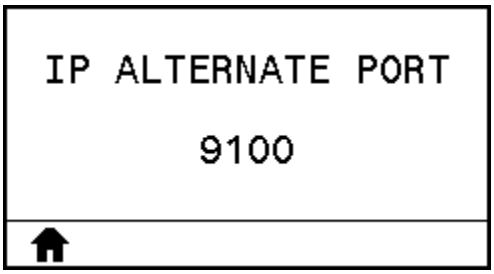


| | |
|---|---|
| User menu item: | **Home Menu** > NETWORK |
| SGD command used: | `ip.port_alternate` |
| Printer web page: | **View and Modify Printer Settings** > **Network Communications Setup** > **Wireless Setup** |

## RESET NETWORK

This option resets the wired or wireless print server and saves any changes that you made to any network settings.

**IMPORTANT:** You must reset the print server to allow changes to the network settings to take effect.

**NOTE:** For printers with Protected Mode enabled, you cannot modify this setting from the front panel. For more information, refer to the Zebra Link-OS PrintSecure Printer Administration Guide.

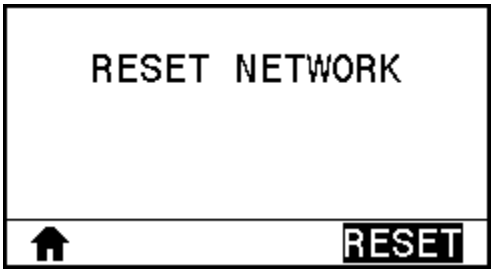


| | |
|---|---|
| User menu item: | **Home Menu** > NETWORK |
| SGD command used: | `device.reset` |
| Printer web page: | **Print Server Settings** > **Reset Print Server** |

## VISIBILITY AGENT

When the printer is connected to a wired or wireless network, it will attempt to connect to Zebra's Asset Visibility Service via the Cloud-based Zebra Printer Connector using an encrypted, certificate-authenticated web socket connection. The printer sends Discovery Data and Settings and Alerts Data. Data printed via any label formats is NOT transmitted.

**NOTE:** For printers with Protected Mode enabled, you cannot modify this setting from the front panel. For more information, refer to the Zebra Link-OS PrintSecure Printer Administration Guide.

To opt out of this feature, disable this setting. For more information, see the "Opting Out of the Asset Visibility Agent" application note at zebra.com.

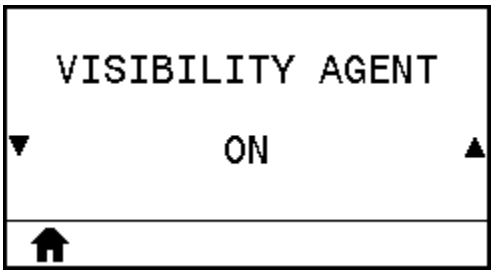


| | |
|---|---|
| User menu item: | **Home Menu** > NETWORK |
| Accepted values: | • ON<br>• OFF |
| SGD command used: | `weblink.zebra_connector.enable` |
| Printer web page: | **View and Modify Printer Settings** > **Network Configuration** > **Cloud Connect Settings** |

## LANGUAGE

If necessary, change the language that the printer displays.

This change affects the words shown on the following:

- the Home menu
- the user menus
- error messages
- the printer configuration label, the network configuration label, and other labels that you can select to print through the user menus

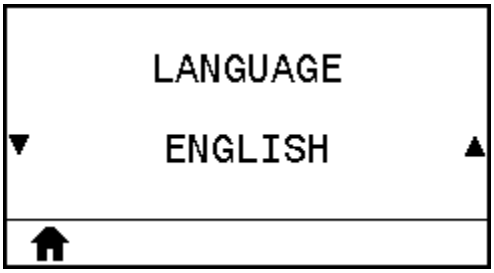


| | |
|---|---|
| User menu item: | **Home Menu** > LANGUAGE |
| Accepted values: | ENGLISH, SPANISH, FRENCH, GERMAN, ITALIAN, NORWEGIAN, PORTUGUESE, SWEDISH, DANISH, SPANISH 2, DUTCH, FINNISH, CZECH, JAPANESE, KOREAN, ROMANIAN, RUSSIAN, POLISH, SIMPLIFIED CHINESE, TRADITIONAL CHINESE<br>**NOTE:** The selections for this parameter are displayed in the actual languages to make it easier for you to find one that you are able to read. |
| Related ZPL command(s): | `^KL` |
| SGD command used: | `display.language` |
| Printer web page: | **View and Modify Printer Settings** > **General Setup** > **Language** |

## COMMAND LANGUAGE

View or select the appropriate command language.

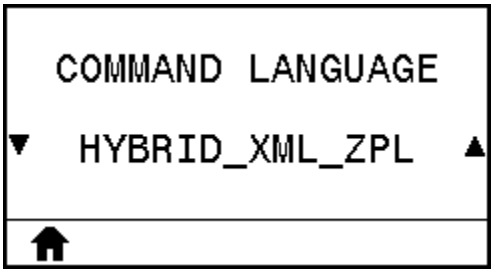


| | |
|---|---|
| User menu item: | **Home Menu** > LANGUAGE |

## COMMAND CHAR

The format command prefix is a two-digit hex value used as a parameter place marker in ZPL/ZPL II format instructions. The printer looks for this hex character to indicate the start of a ZPL/ZPL II format instruction.

**IMPORTANT:** You cannot use the same hex value for the format command prefix, control character, and delimiter characters. The printer must see different characters to work properly. If you are setting the value through the control panel, the printer will skip any value that is already in use.

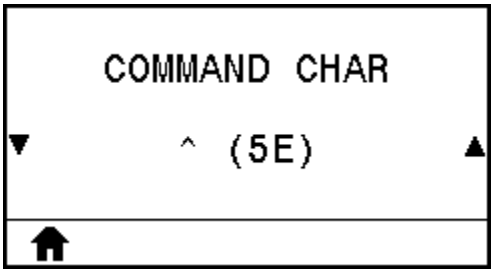


| | |
|---|---|
| User menu item: | **Home Menu** > LANGUAGE |
| Accepted values: | 00 to FF |
| Related ZPL command(s): | `^CC` or `~CC` |
| SGD command used: | `zpl.caret` |
| Printer web page: | **View and Modify Printer Settings** > **ZPL Control** |

## CONTROL CHAR

The printer looks for this two-digit hex character to indicate the start of a ZPL/ZPL II control instruction. Set the control prefix character to match what is used in your label formats.

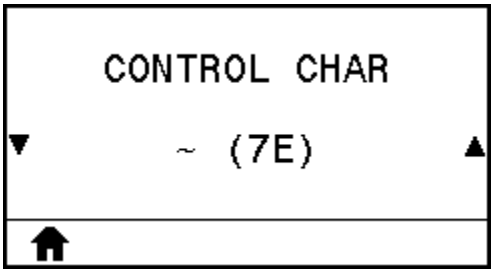


| | |
|---|---|
| User menu item: | **Home Menu** > LANGUAGE |
| Accepted values: | 00 to FF |
| Related ZPL command(s): | `^CT` or `~CT` |

| | |
|---|---|
| SGD command used: | `zpl.control_character` |
| Printer web page: | **View and Modify Printer Settings** > **ZPL Control** |

## DELIMITER CHAR

The delimiter character is a two-digit hex value used as a parameter place marker in ZPL/ZPL II format instructions. Set the delimiter character to match what is used in your label formats.

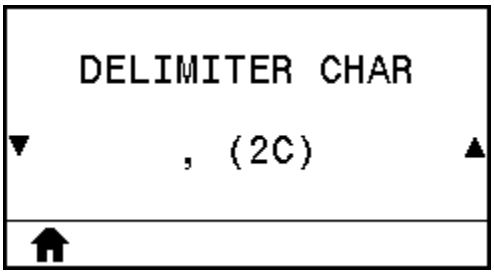


| | |
|---|---|
| User menu item: | **Home Menu** > LANGUAGE |
| Accepted values: | 00 to FF |
| Related ZPL command(s): | `^CD` or `~CD` |
| SGD command used: | `zpl.delimiter` |
| Printer web page: | **View and Modify Printer Settings** > **ZPL Control** |

## ZPL MODE

Select the mode that matches what is used in your label formats. This printer accepts label formats written in either ZPL or ZPL II, eliminating the need to rewrite any ZPL formats that already exist. The printer remains in the selected mode until it is changed in one of the ways listed here.

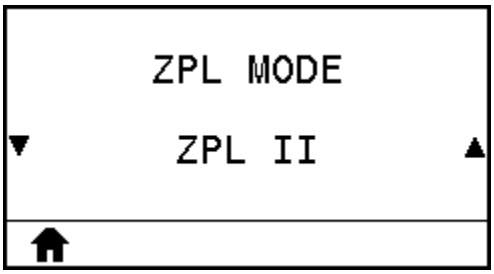


| | |
|---|---|
| User menu item: | **Home Menu** > LANGUAGE |
| Accepted values: | • ZPL II<br>• ZPL |

| | |
|---|---|
| Related ZPL command(s): | `^SZ` |
| SGD command used: | `zpl.zpl_mode` |
| Printer web page: | **View and Modify Printer Settings** > **ZPL Control** |

## VIRTUAL DEVICE

If any Virtual Device apps are installed on your printer, you may view or enable/disable them from this user menu. For more information about Virtual Devices, go to the User Guide for the appropriate Virtual Device, or contact your local reseller.

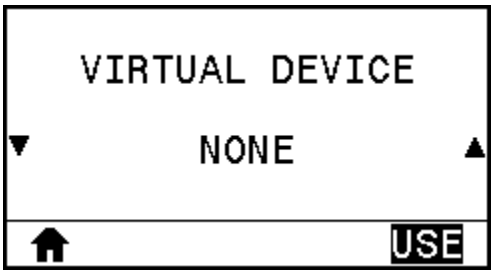


| | |
|---|---|
| User menu item: | **Home Menu** > LANGUAGE |

## SENSOR TYPE

Select the media sensor that is appropriate for the media that you are using. The reflective sensor typically is used only for black mark media. The transmissive sensor typically is used for other media types.

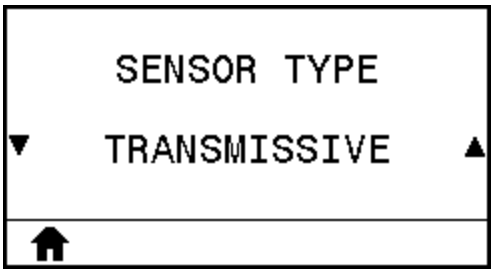


| | |
|---|---|
| User menu item: | **Home Menu** > SENSORS |
| Accepted values: | • TRANSMISSIVE<br>• REFLECTIVE |
| Related ZPL command(s): | `^JS` |
| SGD command used: | `device.sensor_select` |
| Printer web page: | **View and Modify Printer Settings** > **Media Setup** |

## LABEL SENSOR

Set the sensitivity of the label sensor.

**IMPORTANT:** This value is set during sensor calibration. Do not change this setting unless you are told to do so by Zebra Technical Support or by an authorized service technician.

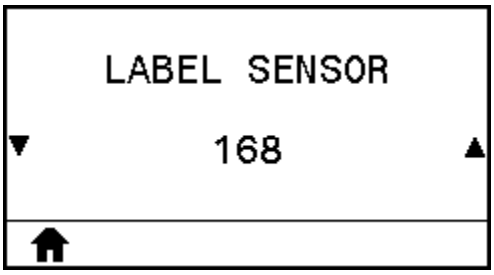


| | |
|---|---|
| User menu item: | **Home Menu** > SENSORS |
| Accepted values: | 0 to 255 |
| SGD command used: | `ezpl.label_sensor` |
| Printer web page: | **View and Modify Printer Settings** > **Calibration** |

## TAKE LABEL

Set the intensity of the take label LED.

**IMPORTANT:** This value is set during sensor calibration. Do not change this setting unless you are told to do so by Zebra Technical Support or by an authorized service technician.

| | |
|---|---|
| User menu item: | **Home Menu** > SENSORS |
| Accepted values: | 0 to 255 |
| SGD command used: | `ezpl.take_label` |
| Printer web page: | **View and Modify Printer Settings** > **Calibration** |

## BAUD RATE

Select the baud value that matches the one being used by the host computer.

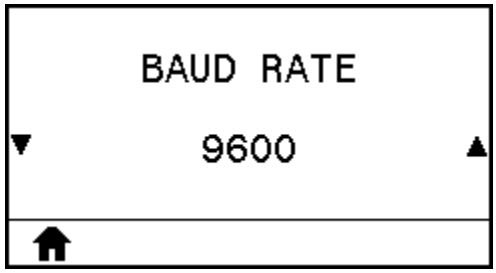


| | |
|---|---|
| User menu item: | **Home Menu** > PORTS |
| Accepted values: | • 115200<br>• 57600<br>• 38400<br>• 28800<br>• 19200<br>• 14400<br>• 9600<br>• 4800 |
| Related ZPL command(s): | `^SC` |
| SGD command used: | `comm.baud` |
| Printer web page: | **View and Modify Printer Settings** > **Serial Communications Setup** |

## DATA BITS

Select the data bits value that matches the one being used by the host computer.

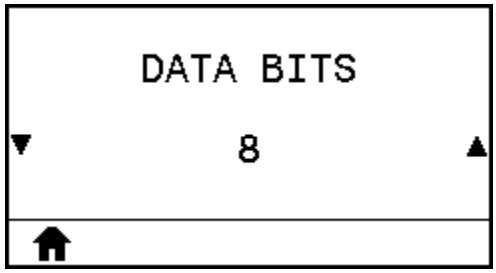


| | |
|---|---|
| User menu item: | **Home Menu** > PORTS |
| Accepted values: | 7 or 8 |

| | |
|---|---|
| Related ZPL command(s): | `^SC` |
| SGD command used: | `comm.data_bits` |
| Printer web page: | **View and Modify Printer Settings** > **Serial Communications Setup** |

## PARITY

Select the parity value that matches the one being used by the host computer.

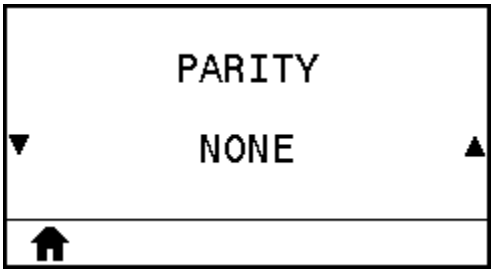


| | |
|---|---|
| User menu item: | **Home Menu** > PORTS |
| Accepted values: | • NONE<br>• EVEN<br>• ODD |
| Related ZPL command(s): | `^SC` |
| SGD command used: | `comm.parity` |
| Printer web page: | **View and Modify Printer Settings** > **Serial Communications Setup** |

## HOST HANDSHAKE

Select the handshake protocol that matches the one being used by the host computer.

| | |
|---|---|
| User menu item: | **Home Menu** > PORTS |
| Accepted values: | • XON/XOFF |

| | |
|---|---|
| | • RTS/CTS<br>• DSR/DTR |
| Related ZPL command(s): | `^SC` |
| SGD command used: | `comm.handshake` |
| Printer web page: | **View and Modify Printer Settings** > **Serial Communications Setup** |

## WML

View the Wireless Markup Language (WML) version. This value cannot be changed.

| | |
|---|---|
| User menu item: | **Home Menu** > PORTS |

## BLUETOOTH ADDRESS

View the printer's Bluetooth Device Address.

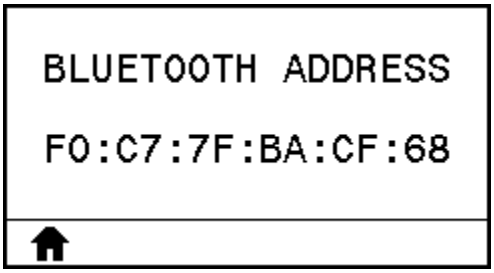


| | |
|---|---|
| User menu item: | **Home Menu** > BLUETOOTH |
| SGD command used: | `bluetooth.address` |

## MODE

View the Bluetooth connection pair printer's device type—Peripheral (typical) or Central.

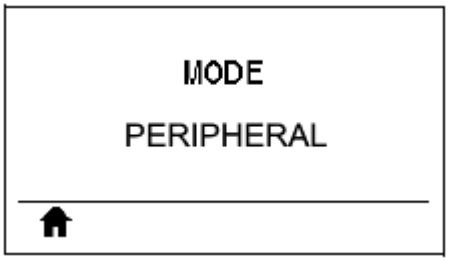


| | |
|---|---|
| User menu item: | **Home Menu** > BLUETOOTH |

## DISCOVERY

Select if the printer is "Discoverable" for Bluetooth device pairing.

**NOTE:** For security, leave this set to OFF when Bluetooth is not in use.

**NOTE:** For printers with Protected Mode enabled, you cannot modify this setting from the front panel. For more information, refer to the Zebra Link-OS PrintSecure Printer Administration Guide.

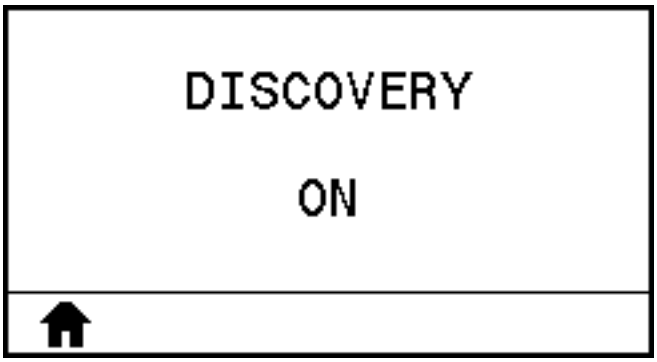


| | |
|---|---|
| User menu item: | **Home Menu** > BLUETOOTH |
| Accepted values: | • ON—Enables Bluetooth discoverable mode.<br>• OFF—Disables Bluetooth discoverable mode. |
| SGD command used: | `bluetooth.discoverable` |

## CONNECTED

View the Bluetooth connection status to its paired device (Yes or No).

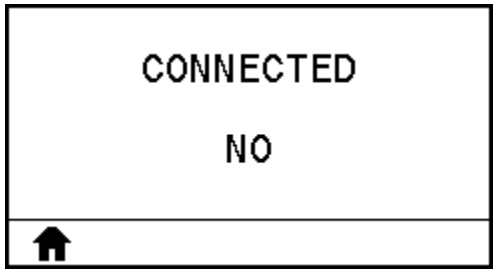


| | |
|---|---|
| User menu item: | **Home Menu** > BLUETOOTH |

## BT SPEC VERSION

View the Bluetooth operational specification level.

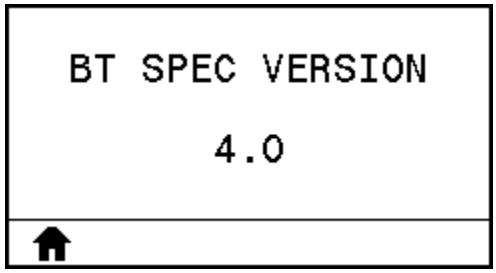


| | |
|---|---|
| User menu item: | **Home Menu** > BLUETOOTH |
| SGD command used: | `bluetooth.radio_version` |

## MIN SECURITY MODE

View the printer's Bluetooth minimum level of applied security.

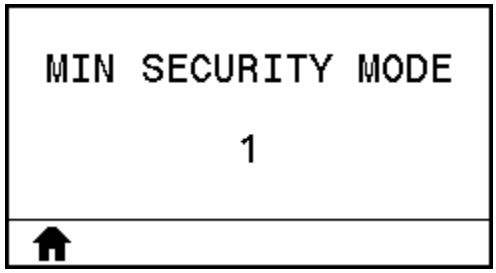


| | |
|---|---|
| User menu item: | **Home Menu** > BLUETOOTH |

# Calibrating the Ribbon and Media Sensors

This procedure describes how to calibrate the printer, which adjusts the sensitivity of the media and ribbon sensors.

For a summary of the options for initiating calibration, see MEDIA/RIBBON CAL on page 112.

**IMPORTANT:** Follow the calibration procedure exactly as presented. All of the steps must be performed even if only one of the sensors requires adjustment. You may press and hold **CANCEL** at any step in this procedure to cancel the process.

1. With the printer in the Ready state, initiate media and ribbon calibration in one of these ways:
   - Press and hold **PAUSE** + **CANCEL** for 2 seconds.
   - Send the `ezpl.manual_calibration` SGD command to the printer. See the Zebra Programming Guide for more information about this command.
   - Navigate to the following menu item on the control panel display. This item is located under the TOOLS menu and the SENSORS menu.
     - Press **RIGHT SELECT** to select **START**.

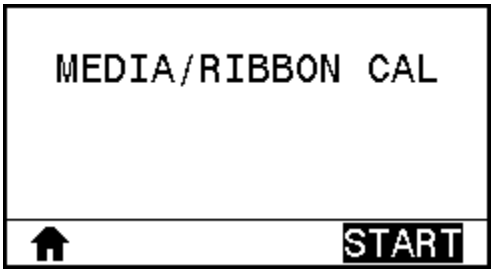


The printer does the following:

- The STATUS light and SUPPLIES light flash yellow once.
- The PAUSE light blinks yellow.
- The control panel displays:

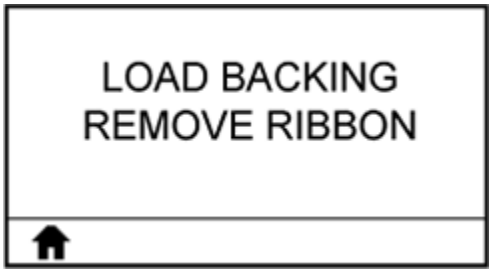


**CAUTION:** The printhead may be hot and could cause severe burns. Allow the printhead to cool.

2. Open the printhead assembly by rotating the printhead-open lever upward.

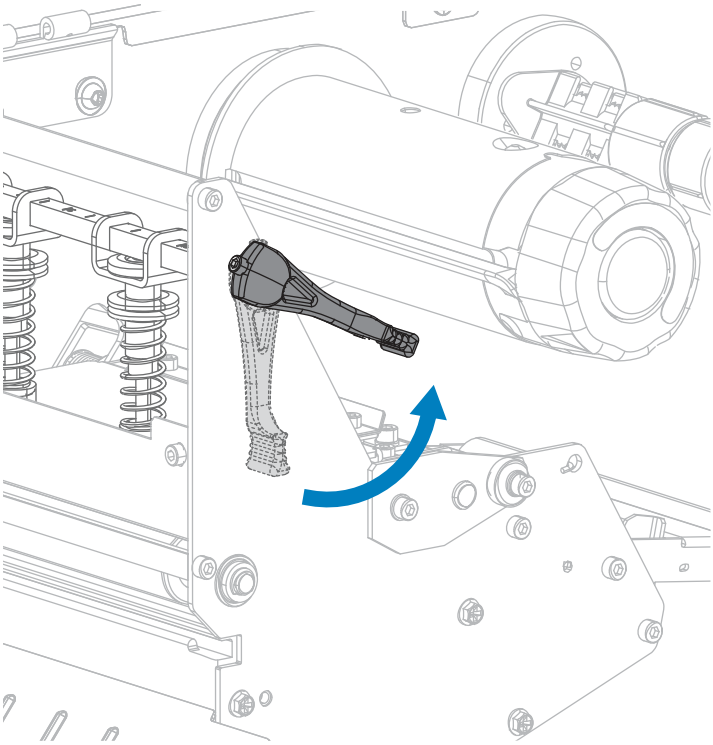

3. Extend the media approximately 8 in. (203 mm) out of the printer.

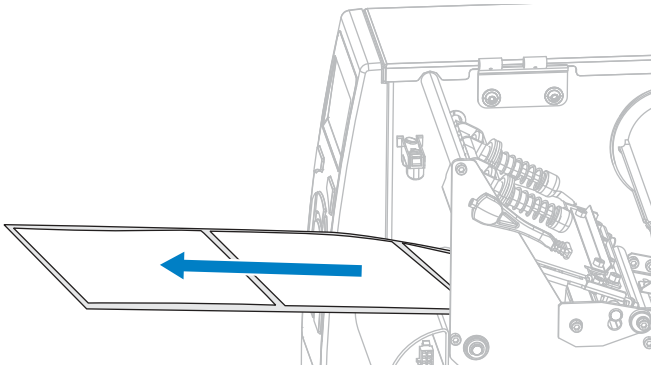

4. Remove the exposed labels so that only the liner remains.

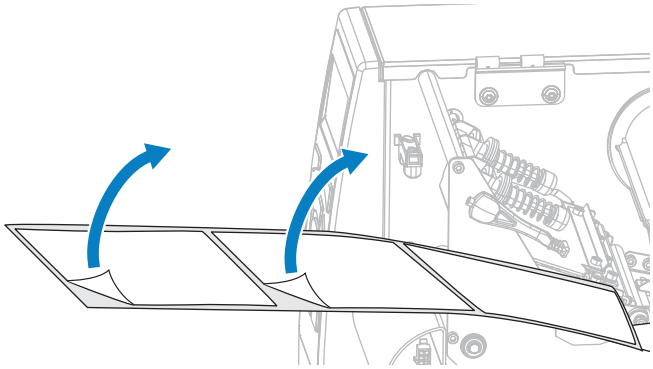

5. Pull the media into the printer so that only the backing is in the sensor.

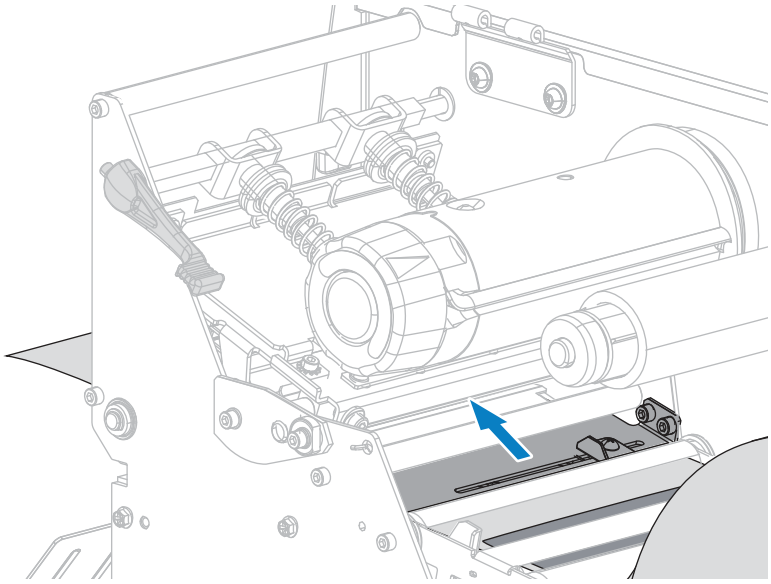

6. Remove the ribbon (if used).
7. Rotate the printhead-open lever downward until it locks the printhead in place.

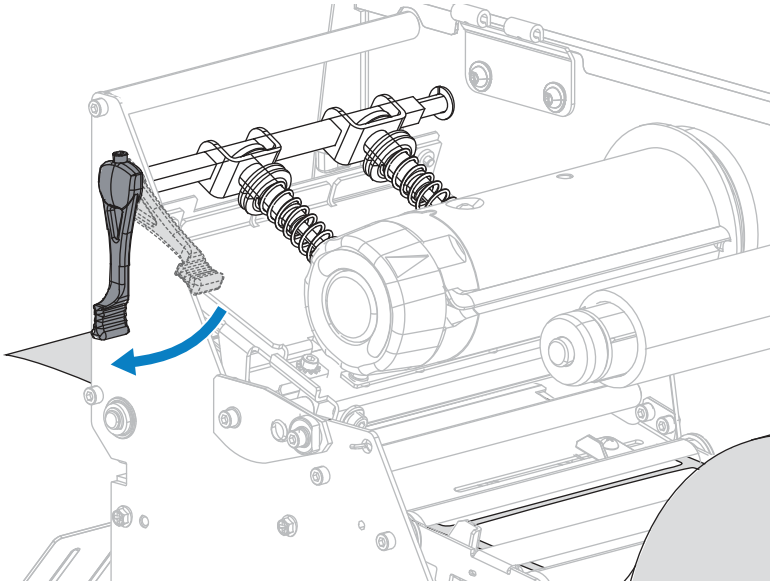

**8.** Press **PAUSE** to begin the media calibration process.

- The PAUSE light turns off.
- The SUPPLIES light flashes.
- The control panel displays:

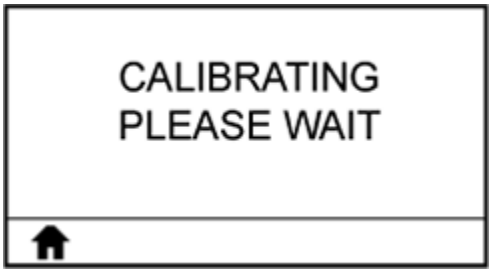


When the process is complete:

- The SUPPLIES light stops flashing.
- The PAUSE light flashes yellow.
- The control panel displays:

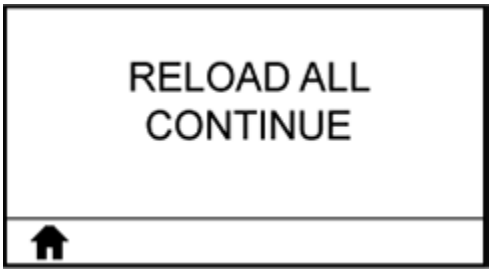

**9.** Open the printhead assembly by rotating the printhead-open lever upward.

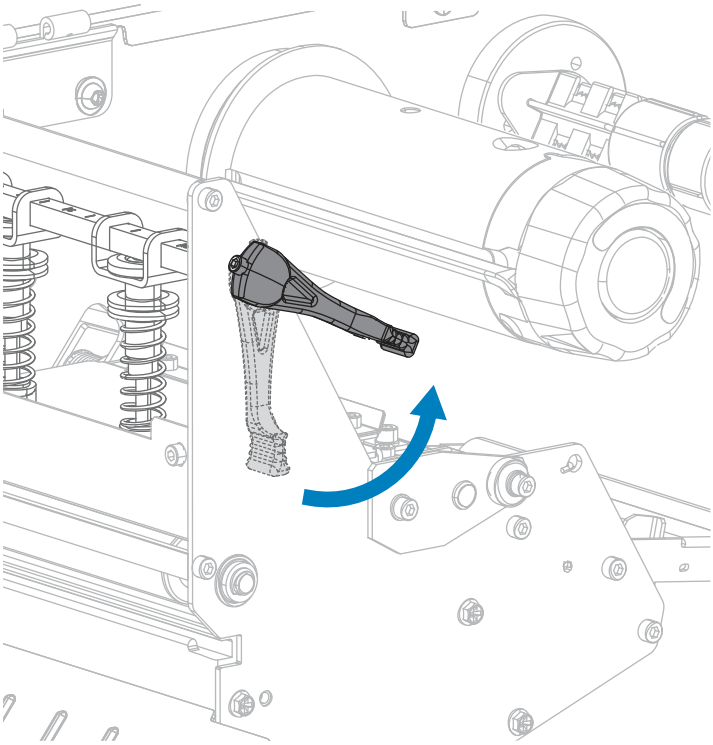

**10.** Pull the media forward until a label is positioned under the media sensors.

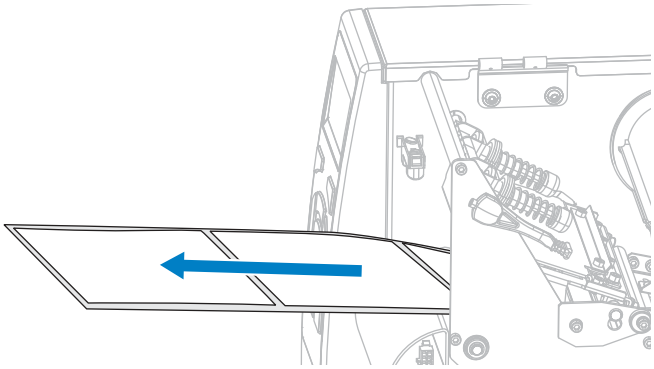

**11.** Reload the ribbon (if used).

**12.** Rotate the printhead-open lever downward until it locks the printhead in place.

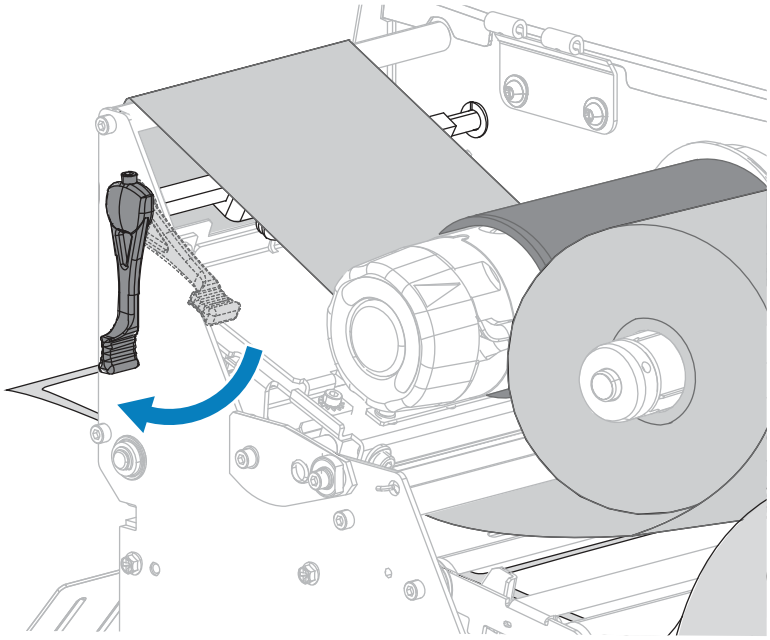

**13.** Close the media door.

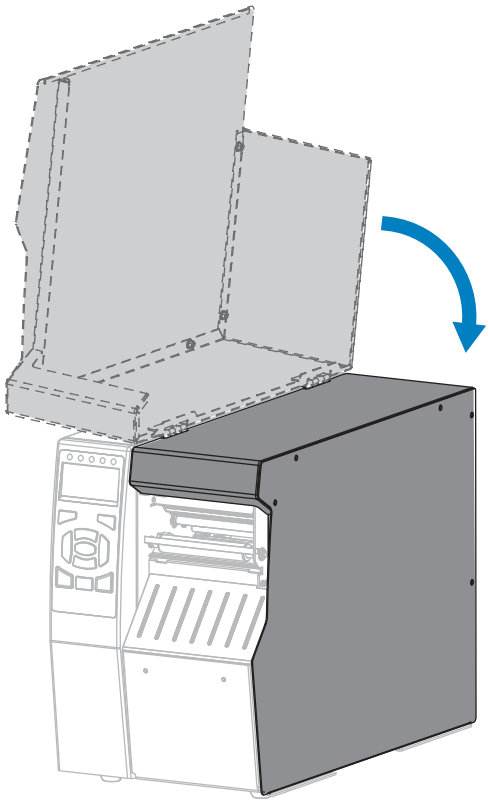

**14.** Press **PAUSE** to enable printing.

# Adjust the Printhead Pressure and Toggle Position

The printhead pressure toggles can be adjusted to create more or less pressure, as needed. They can also be moved from side to side to adjust the pressure in certain areas. Use the lowest printhead pressure necessary to produce good print quality. Higher pressures may cause premature wear on the printhead elements.

If the toggles are not positioned correctly or adjusted to apply the correct pressure, the following types of issues may result:

- media and ribbon may slip
- ribbon may wrinkle
- media may move from side to side during printing
- printing may be too light or too dark on one side of the media

**Figure 13** Printhead Pressure Toggles

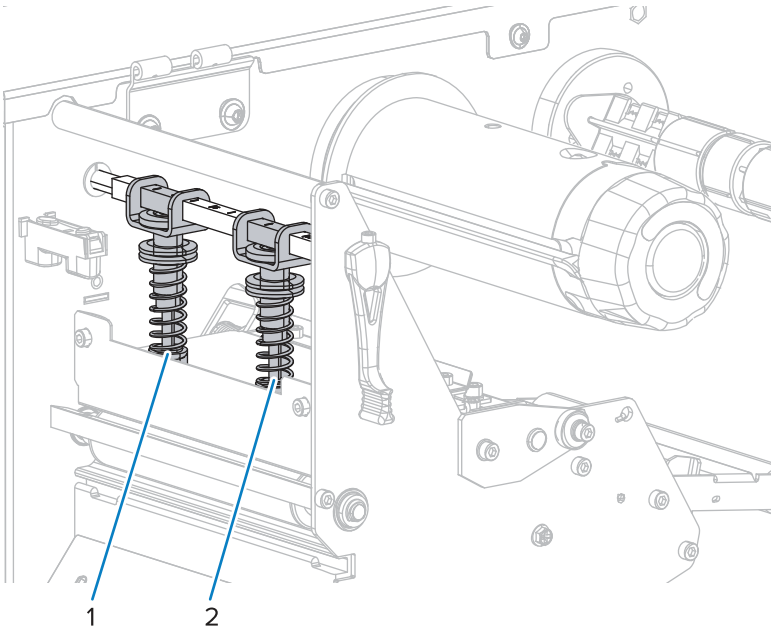


| | |
|---|---|
| 1 | Inside toggle |
| 2 | Outside toggle |

## Adjusting the Toggle Position

1. Rotate the printhead-open lever upward to lessen the pressure on the toggles.

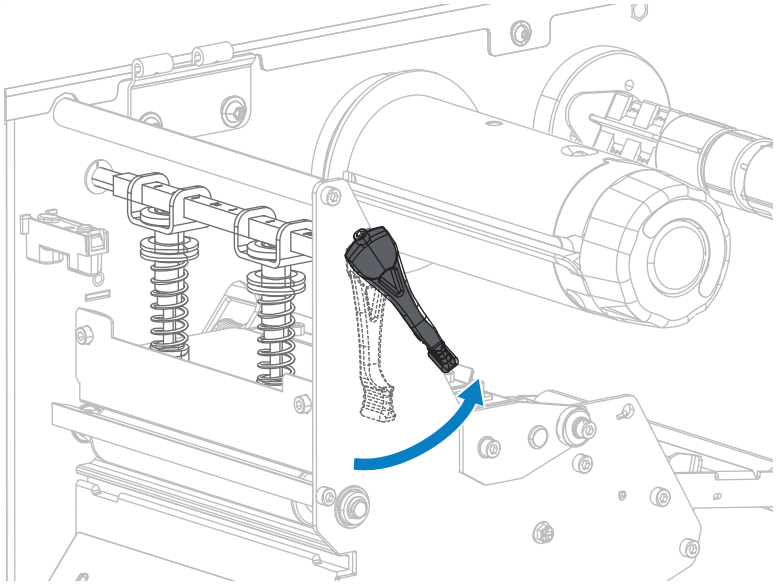

2. Loosen the locking nut at the top of the toggle to be moved.

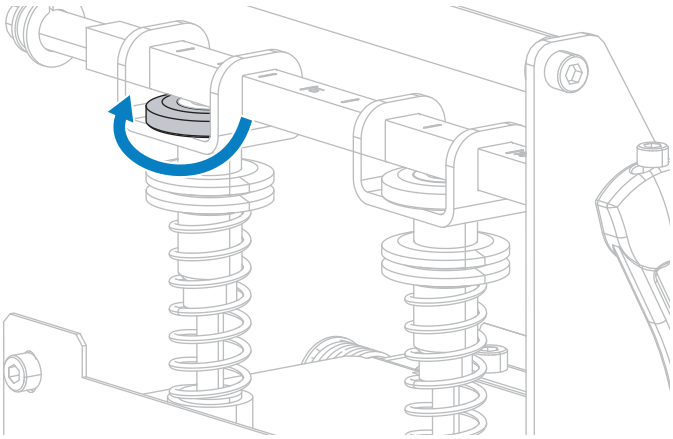

3. Reposition the toggle as necessary to provide even pressure on the media. For extremely narrow media, position the inside toggle over the center of the media, and decrease the pressure on the outside toggle.

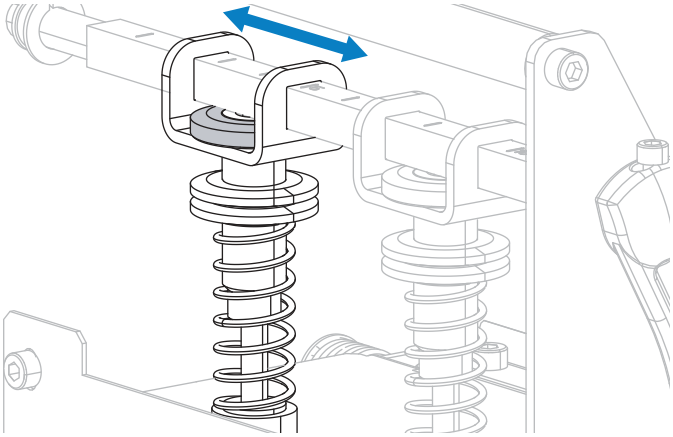

4. Tighten the locking nut.

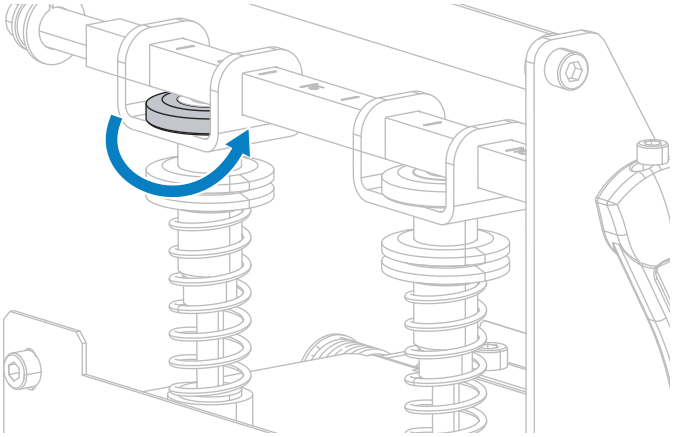

## Adjusting the Printhead Pressure

If positioning the toggles properly does not solve a print quality or other issue, try adjusting the printhead pressure. Maximize printhead life by using the lowest pressure that produces the desired print quality.

Perform this procedure if you are experiencing any of the following:

- The media requires higher pressure overall to print well.
- The media requires lower pressure overall to print well.
- The prints is too light on the left side of the label.
- The print is too light on the right side of the label.
- The media shifts left while printing.
- The media shifts right while printing.

If none of these issues exist, do not continue with this procedure.

1. Equally space the toggles across the width of the media.

2. Measure the distance from the top of the toggle foot (1) to the bottom of the lower knurled nut (2). If the measurement is not 1-3/16 in. (30 mm), loosen the upper knurled nut (3) and adjust the lower knurled nut until the distance is correct.

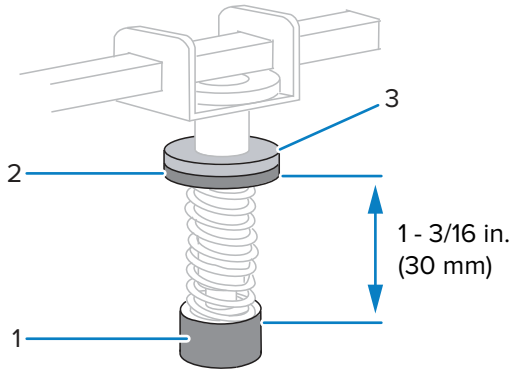


3. Initiate the PRINT LINE option of PRINT TEST FORMAT on page 118.
4. While printing labels, use the control panel to lower the darkness setting until the labels are printing gray instead of black. (See DARKNESS on page 97.)
5. Which of the following issues are you experiencing?

| If the media... | Then... |
|---|---|
| Requires higher pressure overall to print well. | Increase the pressure on both toggles. |
| Requires lower pressure overall to print well. | Decrease the pressure on both toggles. |
| Prints too lightly on the left side of the label. | Increase the pressure on the inside toggle. |
| Prints too lightly on the right side of the label. | Increase the pressure on the outside toggle. |
| Shifts left while printing. | Increase the pressure on the outside toggle.<br>OR<br>Decrease the pressure on the inside toggle. |
| Shifts right while printing. | Increase the pressure on the inside toggle.<br>OR<br>Decrease the pressure on the outside toggle |

6. Lock the toggle pressure by tightening the upper knurled nut against the lower knurled nut.
7. Reposition the toggles for printing.
8. If necessary, reinitiate the PRINT LINE option of PRINT TEST FORMAT on page 118.
9. While printing labels, use the control panel to raise the darkness setting until the labels are again printing black instead of gray. (See DARKNESS on page 97.)
10. Check the print quality, and if necessary, repeat this procedure until the printhead pressure is adequate.

## Adjusting the Transmissive Media Sensors

The transmissive media sensor assembly consists of two parts. The media passes between the two parts. Adjust these sensors only when the printer cannot detect the top of the labels. In this situation, the

printer displays MEDIA OUT - LOAD MEDIA even though there are labels loaded in the printer. For non-continuous media with a notch or hole in the media, the sensor must be positioned directly above the notch or hole.

This procedure describes repositioning the media sensors.

1. Remove the ribbon (if ribbon is used).
2. Locate the upper media sensor. The upper media sensor eye is directly below the adjustment screw head.

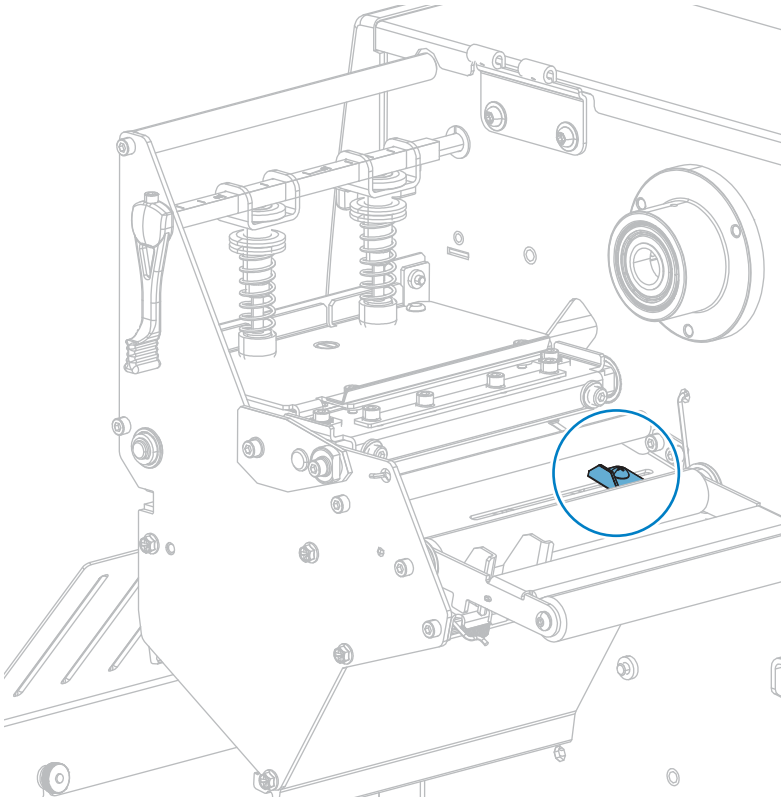

3. Slide the upper media sensor along the slot to the desired position.

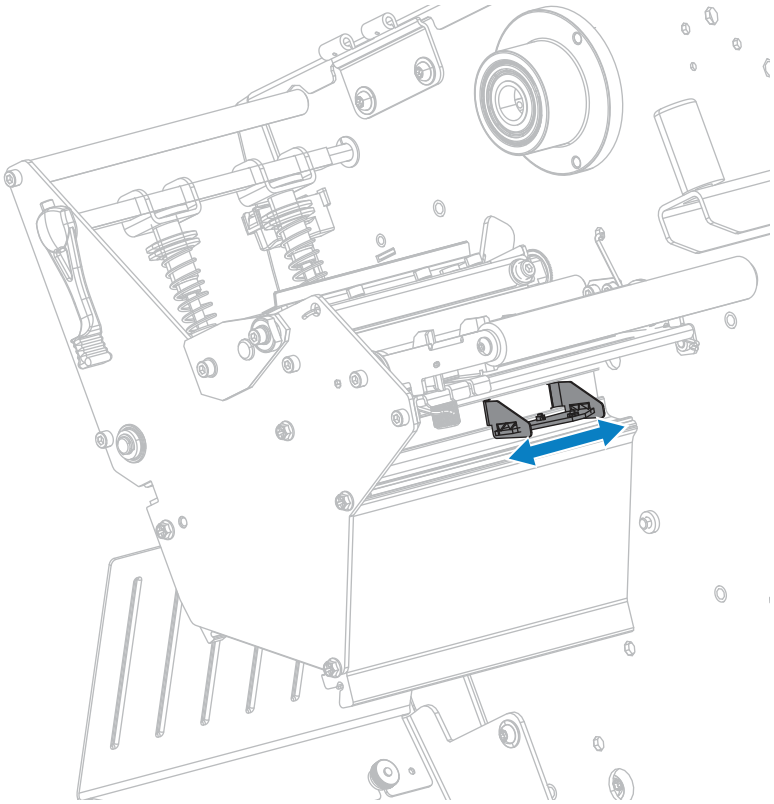

4. Locate the lower media sensor assembly under the rear roller.

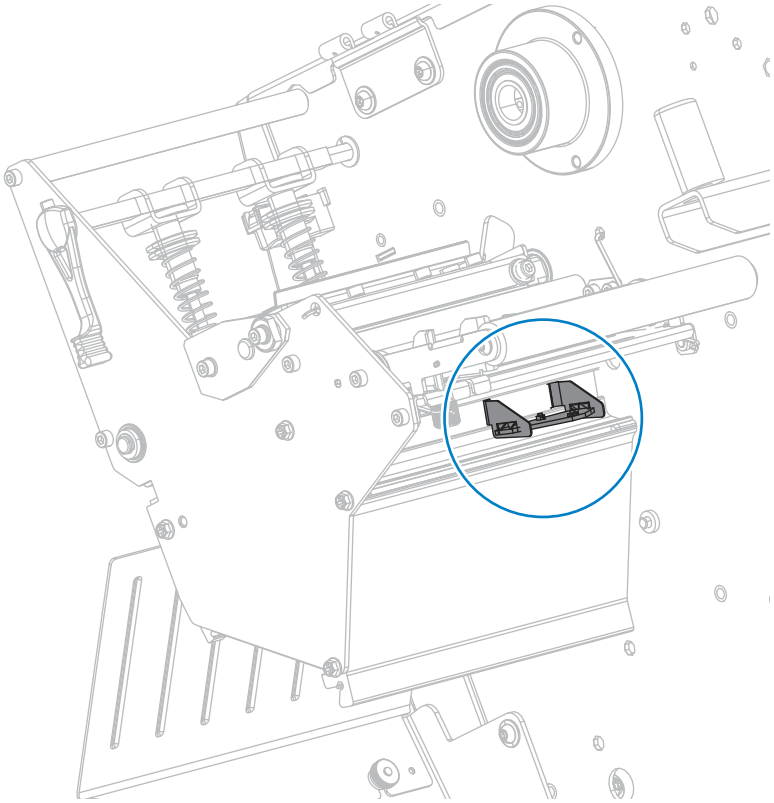

5. Slide the lower sensor until it is under the upper media sensor. Gently pull the wires as needed (wires should have a little slack).

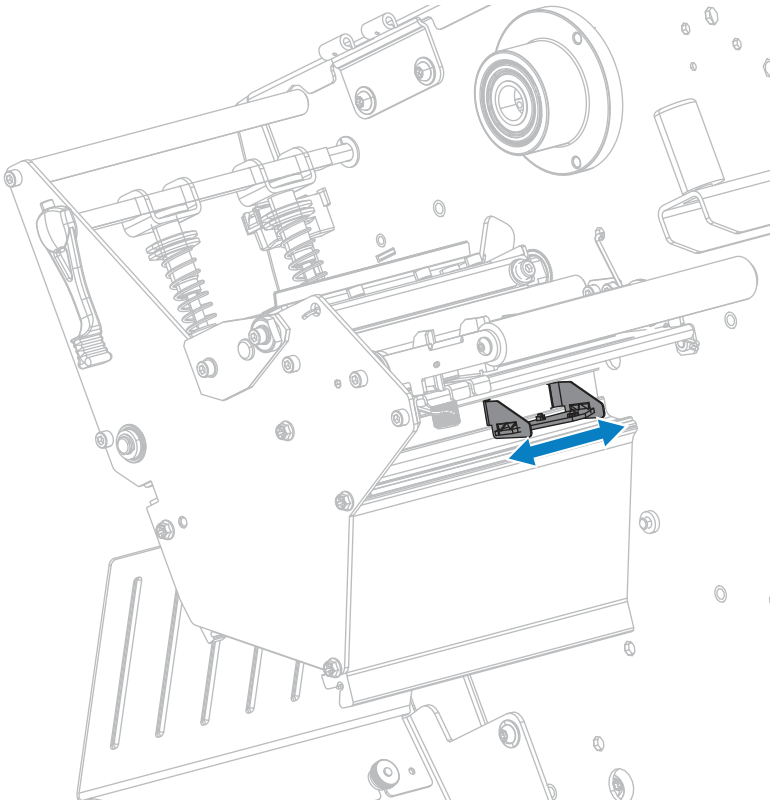

## Removing Used Ribbon

At minimum, remove used ribbon from the ribbon take-up spindle each time you change the ribbon roll. With ribbon that is half or less the width of the printhead, remove used ribbon each time you load a new roll of media. This ensures that uneven pressure on the ribbon take-up spindle does not interfere with the ribbon release bars on the spindle.

1. Has the ribbon run out?

| If the ribbon... | Then... |
|---|---|
| Ran out | Continue with the next step. |
| Did not run out | Cut or break the ribbon before the ribbon take-up spindle. |

| If the ribbon... | Then... |
|---|---|
| | 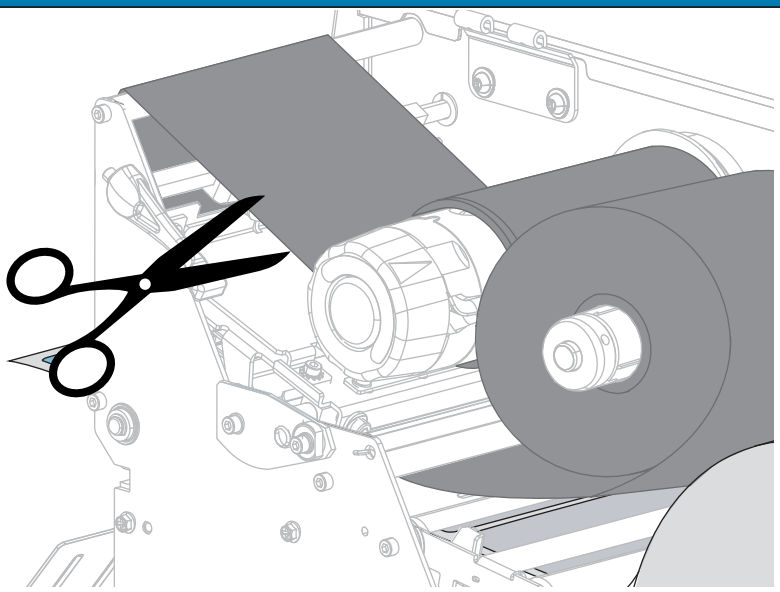 **CAUTION—PRODUCT DAMAGE:** Do not cut the ribbon directly on the ribbon take-up spindle. Doing so may damage the spindle. |

2. While holding the ribbon take-up spindle, turn the ribbon release knob to the left until it stops.

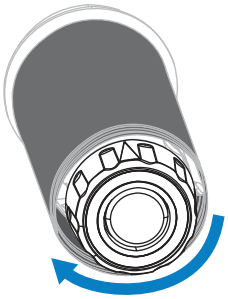

The ribbon release bars pivot down, easing the spindle's grip on the used ribbon.

3. After the ribbon release bars have pivoted down, if possible, turn the ribbon take-up spindle one full to the right to help loosen the ribbon on the spindle.
4. Slide the used ribbon off of the ribbon take-up spindle and discard.

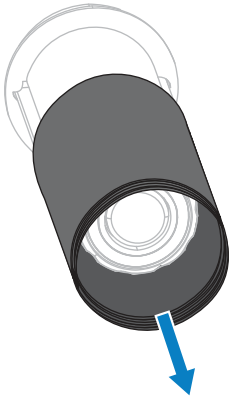

# Install the Rewind/Liner Take-Up Plate

The rewind/liner take-up plate is used in different positions for Rewind mode versus Peel mode or Applicator Mode.

## Installing the Rewind/Liner Take-up Plate - Peel/Applicator Mode

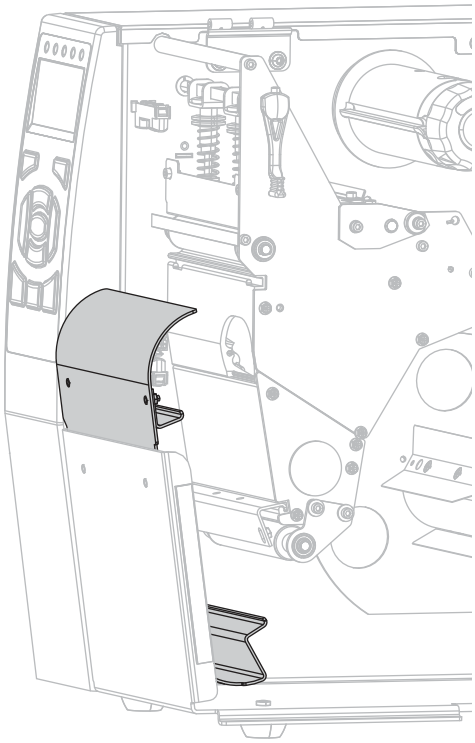

1. Loosen the two knurled nuts on the outside stud on the printer's base.

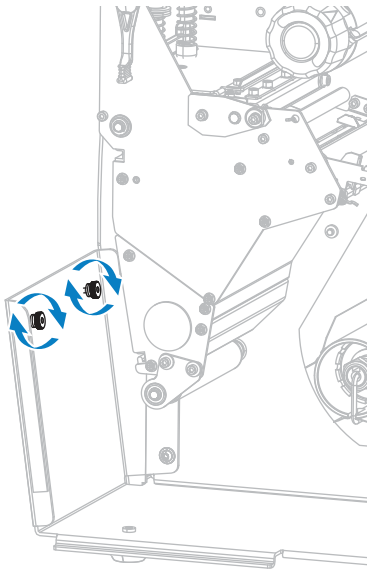

2. Align the large holes of the keyholes in the rewind/peel plate over the knurled nuts, and then slide the plate down until it hits the studs.

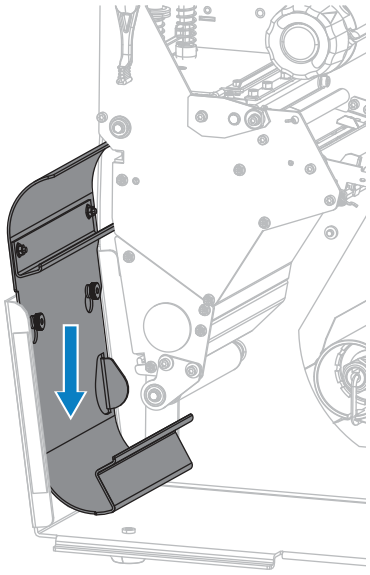

3. Tighten the two knurled nuts.

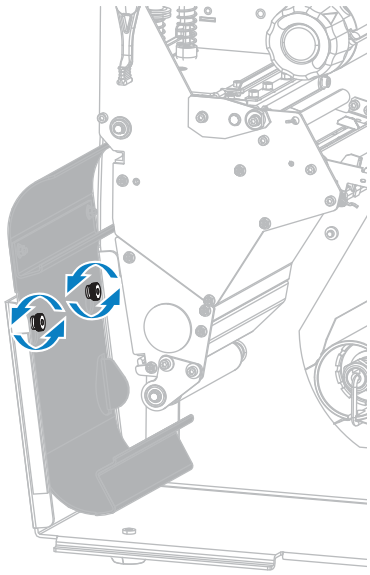

## Installing the Rewind/Liner Take-up Plate - Rewind Mode

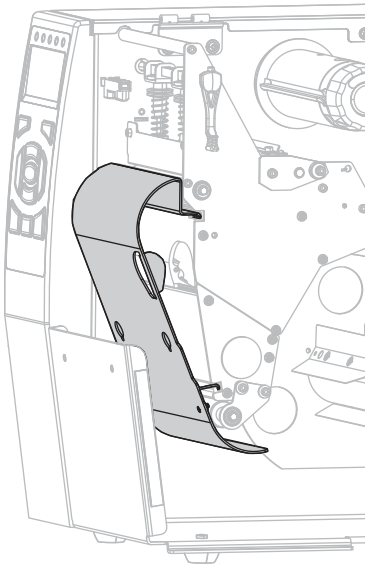

1. Align the upper and lower lips of the rewind plate with the slots in the print mechanism and the rewind assembly.

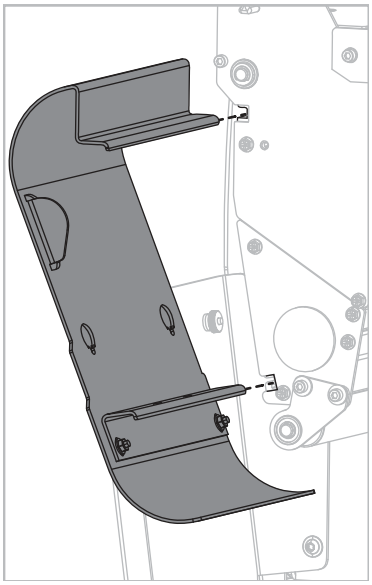

**2.** Slide the plate into the slots until it stops.

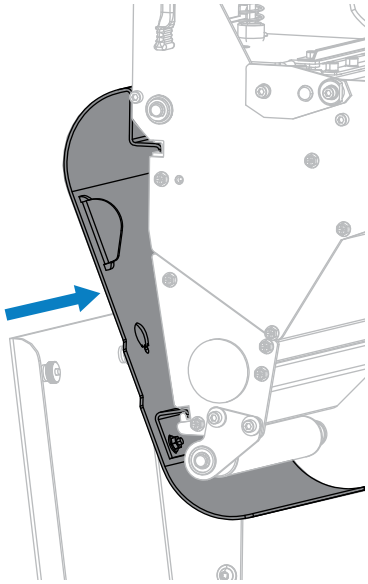

# Routine Maintenance

This section provides routine cleaning and maintenance procedures.

## Cleaning Schedule and Procedures

Routine preventive maintenance is a crucial part of normal printer operation. By taking good care of your printer, you can minimize the potential problems that you might have with it and help to achieve and to maintain your standards for print quality.

Over time, the movement of media or ribbon across the printhead wears through the protective ceramic coating, exposing and eventually damaging the print elements (dots). To avoid abrasion:

- Clean the printhead frequently.
- Minimize printhead pressure and burn temperature (darkness) settings by optimizing the balance between the two.
- When using Thermal Transfer mode, ensure that the ribbon is as wide or wider than the media to prevent exposing the printhead elements to the more abrasive label material.

**IMPORTANT:** Zebra is not responsible for damage caused by the use of cleaning fluids on this printer.

Specific cleaning procedures are provided on the following pages. This table shows the recommended cleaning schedule. These intervals are intended as guidelines only. You may have to clean more often, depending upon your application and media.

**Table 3** Recommended Cleaning Schedule

| Area | Method | Interval |
|---|---|---|
| Printhead | Solvent* | Direct Thermal Mode: After every roll of media (or 500 feet of fanfold media).<br>Thermal Transfer Mode: After every roll of ribbon. |
| Platen roller | Solvent* | |
| Media sensors | Air blow | |
| Ribbon sensor | Air blow | |
| Media path | Solvent* | |
| Ribbon path | Solvent* | |
| Pinch roller (part of Peel-Off option) | Solvent* | |

**Table 3** Recommended Cleaning Schedule (Continued)

| Area | | Method | Interval |
|---|---|---|---|
| Cutter module | If cutting continuous, pressure-sensitive media | Solvent* | After every roll of media (or more often, depending upon your application and media). |
| | If cutting tag stock or label liner material | Solvent* and air blow | After every two or three rolls of media. |
| Tear-off/peel-off bar | | Solvent* | Once a month. |
| Take-label sensor | | Air blow | Once every six months. |

* Zebra recommends using Preventive Maintenance Kit (part number 47362). In place of the Preventive Maintenance Kit, you may use a lint-free cloth dipped in 99.7% isopropyl alcohol.

## Cleaning the Exterior, the Media Compartment, and the Sensors

Over time, dust, grime, and other debris may build up on the outside and inside of your printer, particularly in a harsh operating environment.

### Printer Exterior

You may clean the exterior surfaces of the printer with a lint-free cloth and a small amount of a mild detergent, if necessary. Do not use harsh or abrasive cleaning agents or solvents.

**IMPORTANT:**

Zebra is not responsible for damage caused by the use of cleaning fluids on this printer.

## Cleaning the Media Compartment and Sensors

This section explains how to clean the sensors.

- Brush, air blow, or vacuum any accumulated paper lint and dust away from the media and ribbon paths.

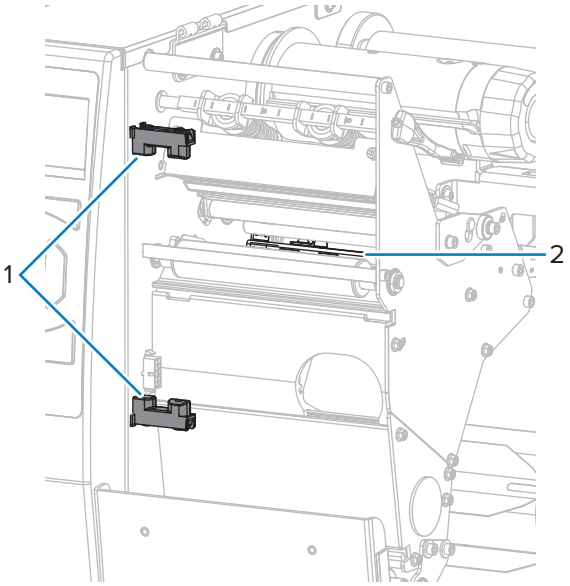


| | |
|---|---|
| 1 | Take-label sensor |
| 2 | Snap plate |

## Cleaning the Printhead and Platen Roller

Inconsistent print quality, such as voids in the barcode or graphics, may indicate a dirty printhead

For the recommended cleaning schedule, see Cleaning Schedule and Procedures on page 158.

**CAUTION—ESD:** Before touching the printhead assembly, discharge any built-up static electricity by touching the metal printer frame or by using an anti-static wriststrap and mat.

1. Raise the media door.

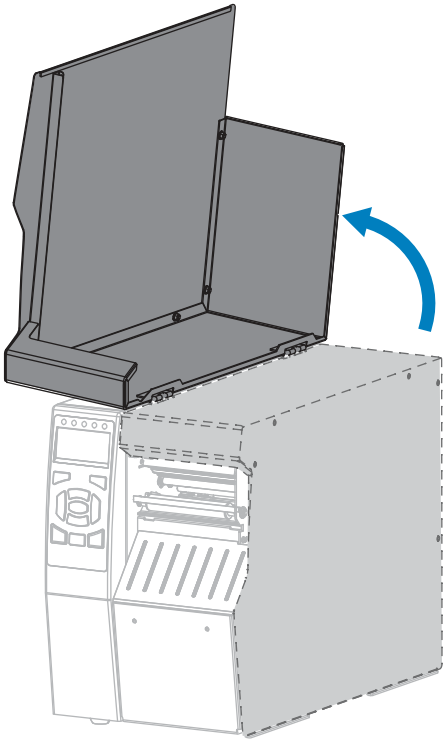

2. Open the printhead assembly by rotating the printhead-open lever upward.

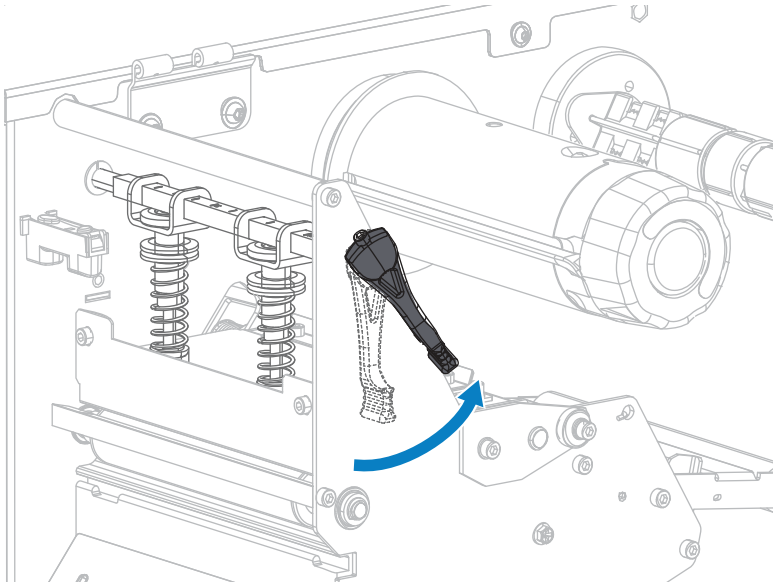

3. Remove the ribbon (if used) and the media.

4. Using the swab from a Zebra Preventive Maintenance Kit, wipe along the brown strip on the printhead assembly from end to end. In place of the Preventive Maintenance Kit, you may use a clean swab dipped in 99.7% isopropyl alcohol. Allow the solvent to evaporate.

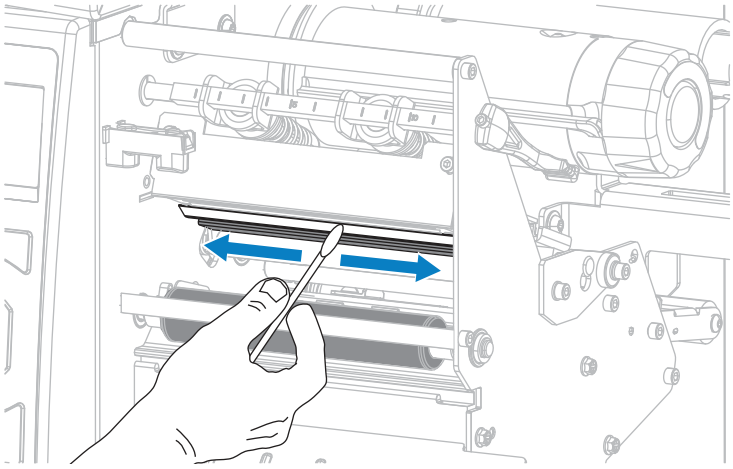

5. While manually rotating the platen roller, clean it thoroughly with the swab. Allow the solvent to evaporate.

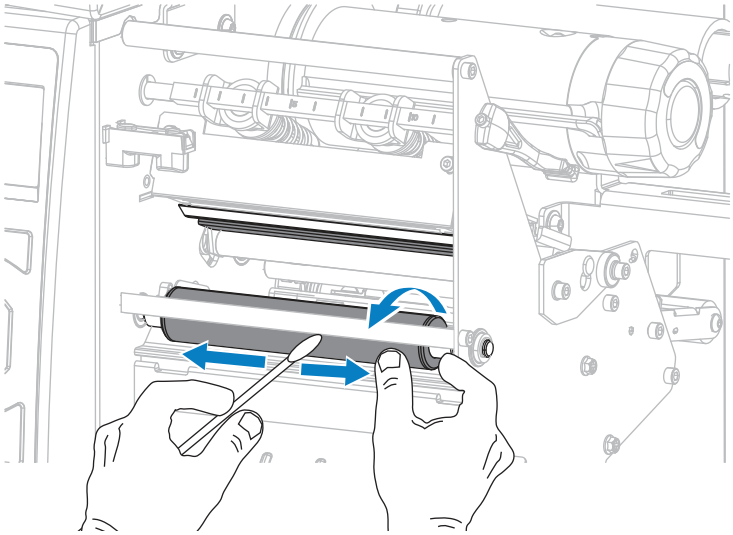

6. Reload the ribbon (if used) and the media. For instructions, see Loading the Ribbon on page 75 or Load the Media on page 44.

7. Rotate the printhead-open lever downward until it locks the printhead in place.

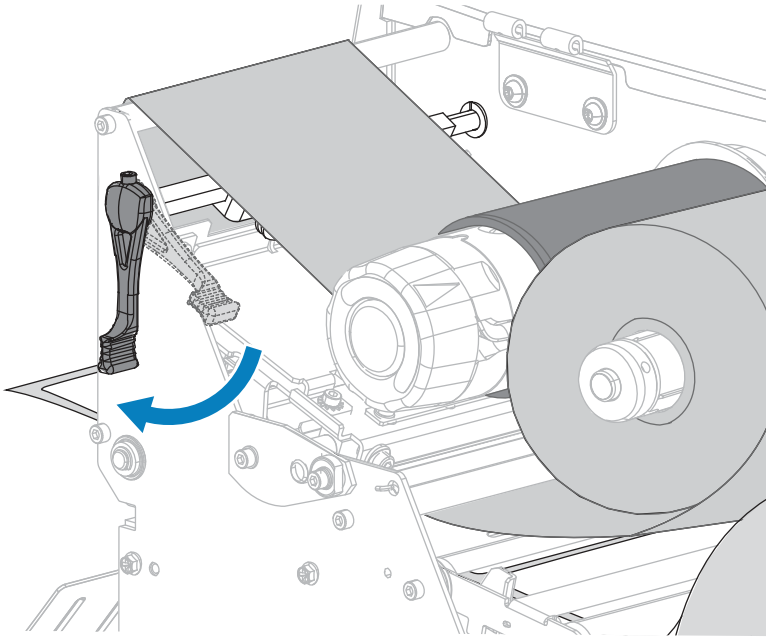

8. Close the media door.

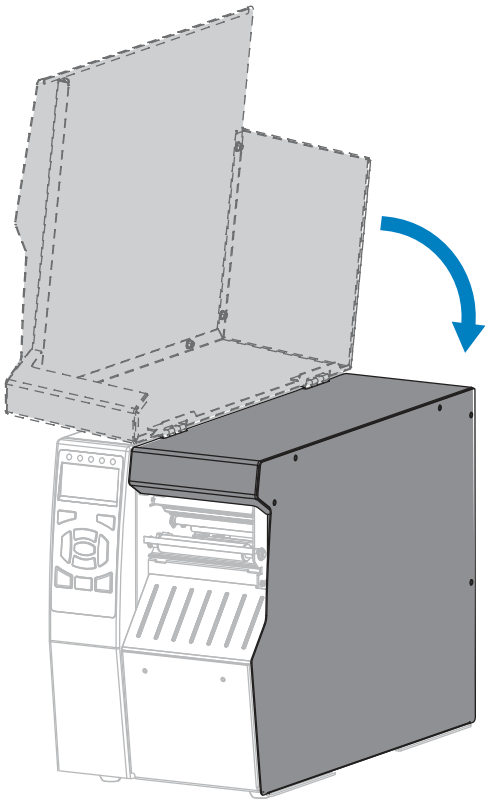

The printer is ready to operate.

9. Press **PAUSE** to exit pause mode and enable printing.

   The printer may perform a label calibration or feed a label, depending on your settings.

**NOTE:** If performing this procedure does not improve print quality, try cleaning the printhead with Save-A-Printhead cleaning film. This specially coated material removes contamination buildup without damaging the printhead. Call your authorized Zebra reseller for more information.

## Cleaning and Lubricating the Cutter Module

If the cutter is not cutting the labels cleanly or if it jams with labels, clean the cutter blades. After cleaning the blades, apply lubrication to them to help extend the life of your cutter module.

**CAUTION:** For personnel safety, always power off and unplug the printer before performing this procedure.

**NOTE:** Turn off (O) the printer and disconnect it from the power source before performing the following procedure.

1. Turn off (O) the printer and disconnect the AC power cord.
2. Raise the media door.

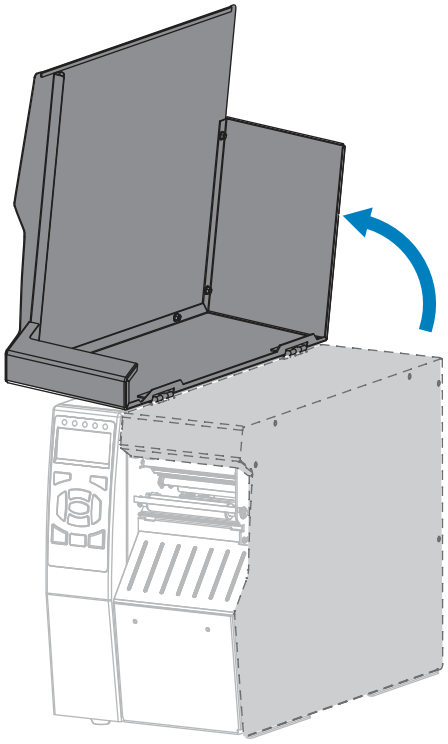

3. Remove media that is loaded through the cutter module.

4. Remove the cutter catch tray (if used).

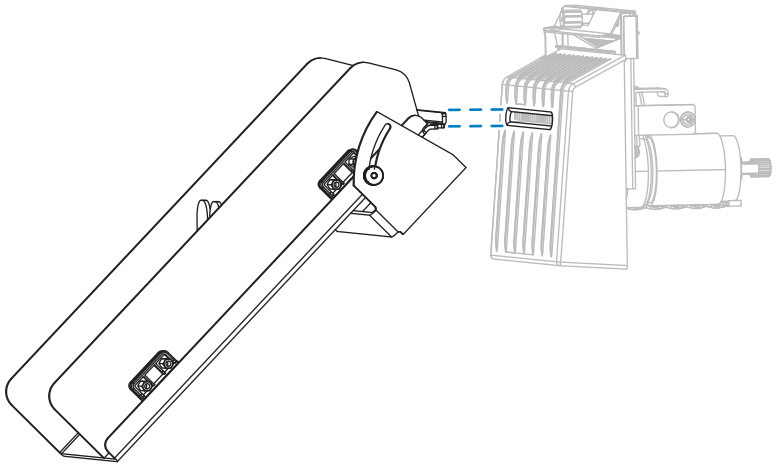

5. Loosen and remove the thumbscrew and lock washer on the cutter shield.

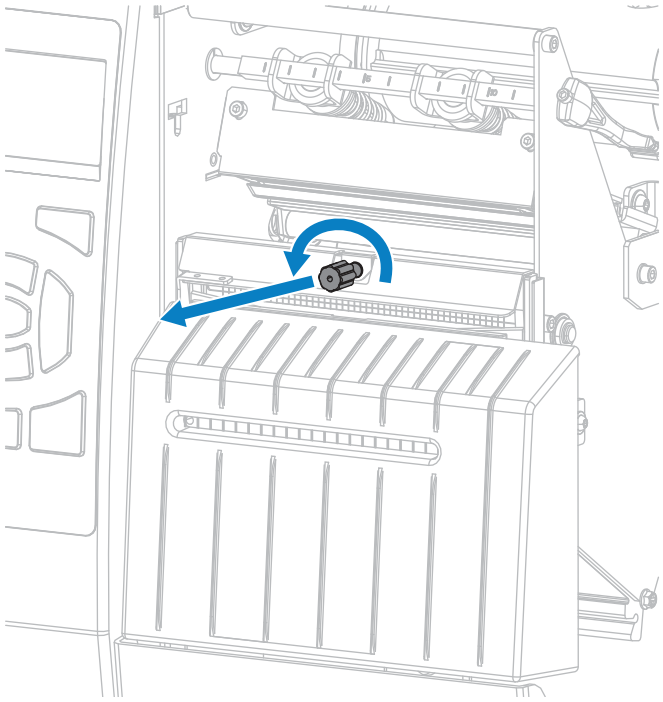

**CAUTION:** The cutter blade is sharp. Do not touch or rub the blade with your fingers.

**6.** Remove the cutter shield.

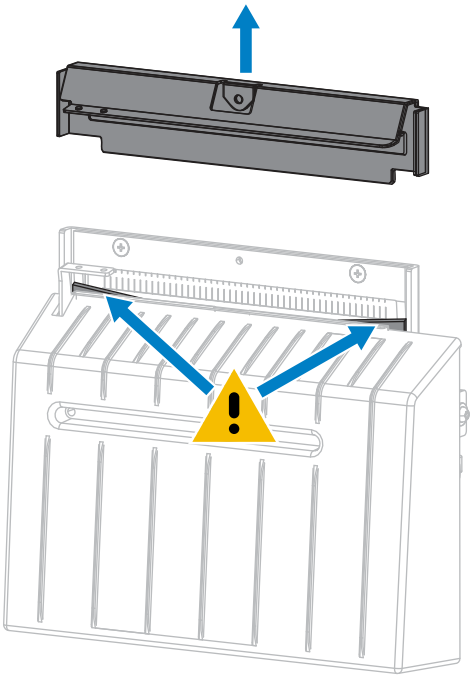

**7.** Is the cutter blade fully exposed?

**Figure 14** Blade in lowered position and Blade fully exposed

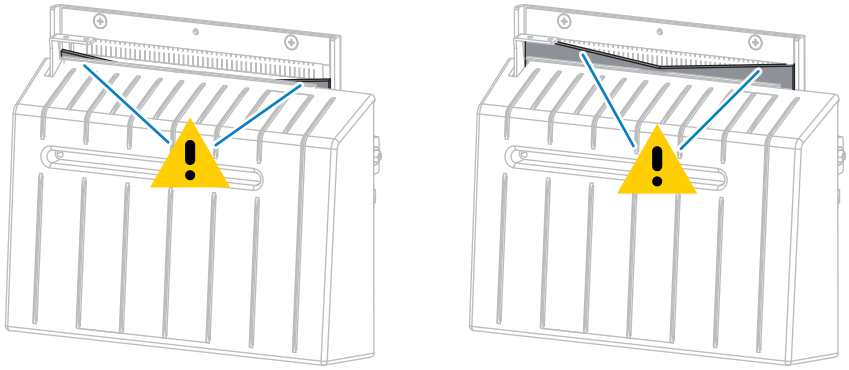

| If the blade is... | Then... |
|---|---|
| Lowered | Continue with step 8 to remove the cutter module from the printer so that you can rotate the blade upward. |
| Fully exposed | Skip to Step 9. |

**8.** IMPORTANT! This part of the procedure should be performed only by experienced users and only when the cutter blade is not fully exposed for cleaning, as shown in the previous step.

**a)** Remove the cutter mounting screw.

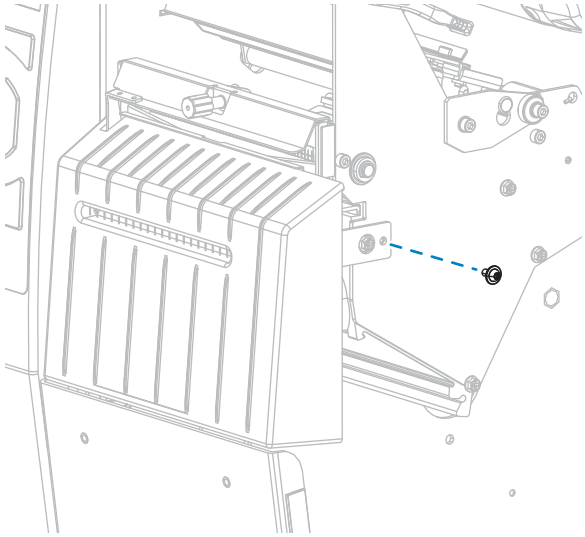

**b)** Slide the cutter module to the right to align the cutter assembly tabs (1) and cutter cover tabs (2) with the corresponding slots (3) in the printer, and then lift the cutter module out of the printer.

Take care not to damage the wires that connect the cutter module to the printer. If desired, you may disconnect these wires.

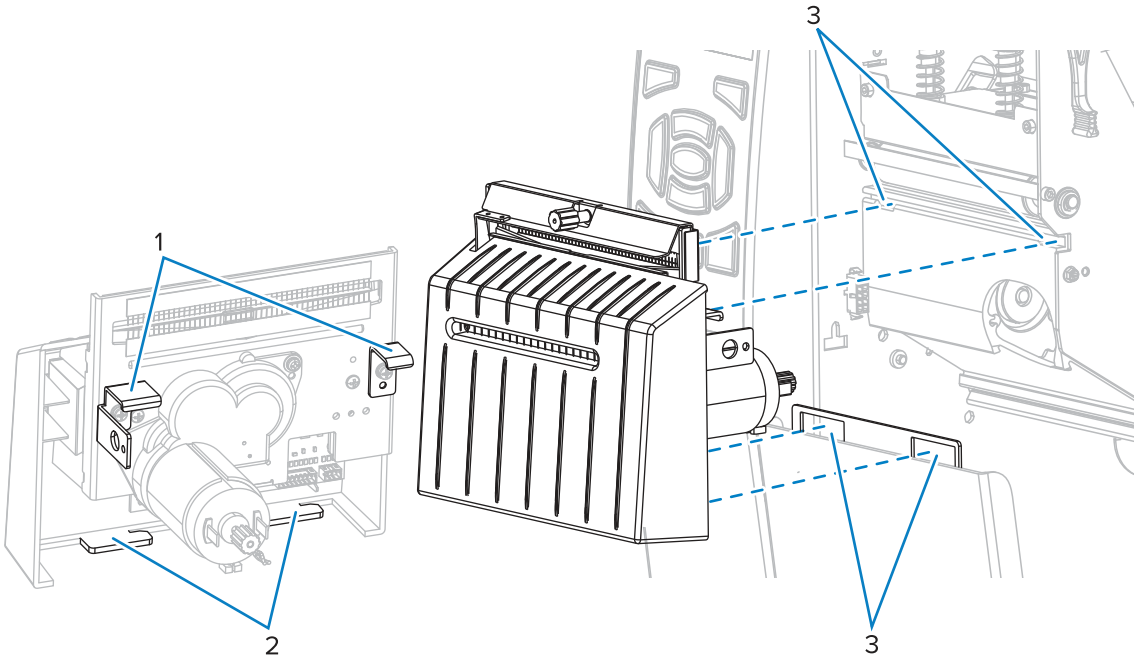


**c)** On the back of the cutter module, rotate the cutter motor thumbscrew to fully expose the cutter blade.

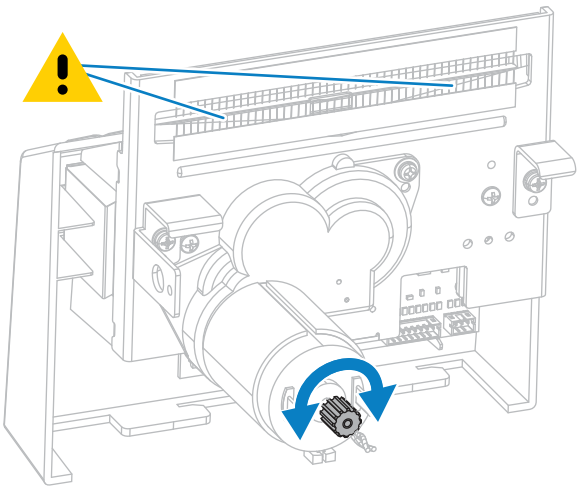

**d)** If you disconnected the wires that connect the cutter module to the printer, reconnect them.

**e)** Align the cutter assembly tabs (1) and cutter cover tabs (2) with the corresponding slots (3) in the printer, and then slide the cutter assembly back into the printer. Take care not to damage the wires that connect the cutter module to the printer.

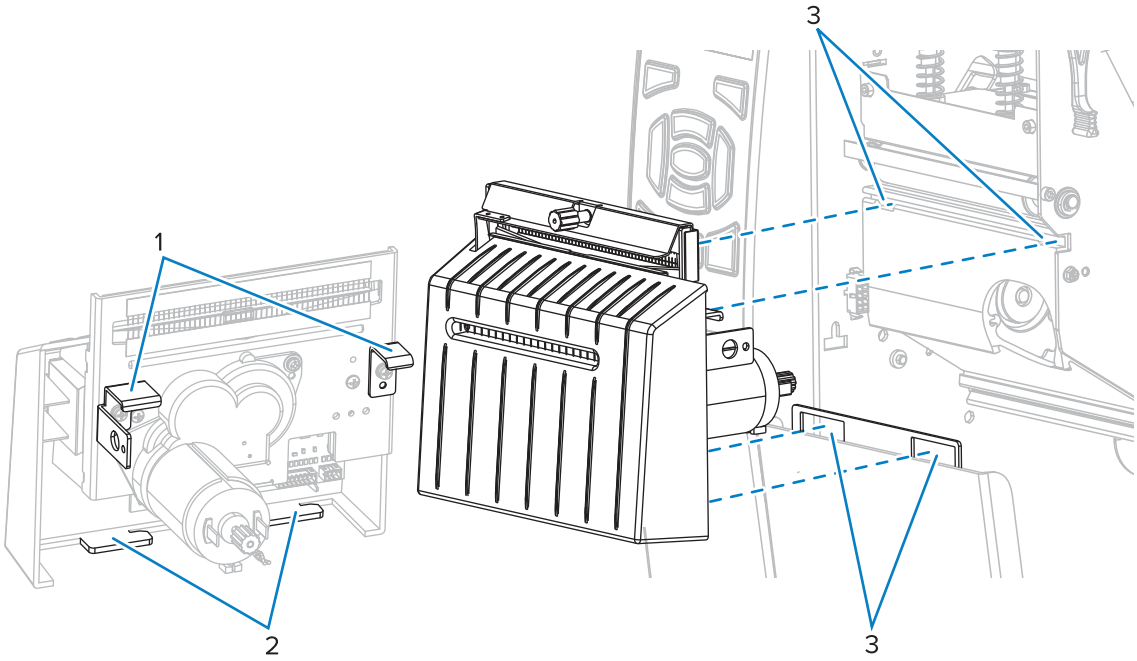


**f)** Slide the cutter module to the left, and then reinstall the cutter mounting screw.

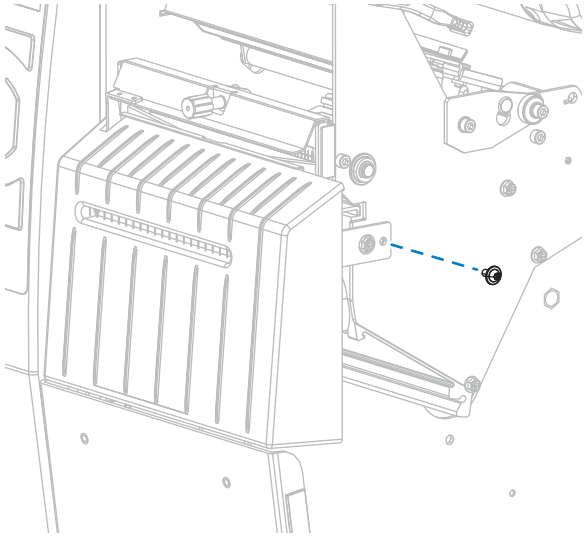

**g)** Continue with step 9.

9. Using the swab from the Preventive Maintenance Kit (part number 47362), wipe along the upper cutting surface and the cutter blade. In place of the Preventive Maintenance Kit, you may use a clean swab dipped in 90% isopropyl alcohol. Allow the solvent to evaporate.

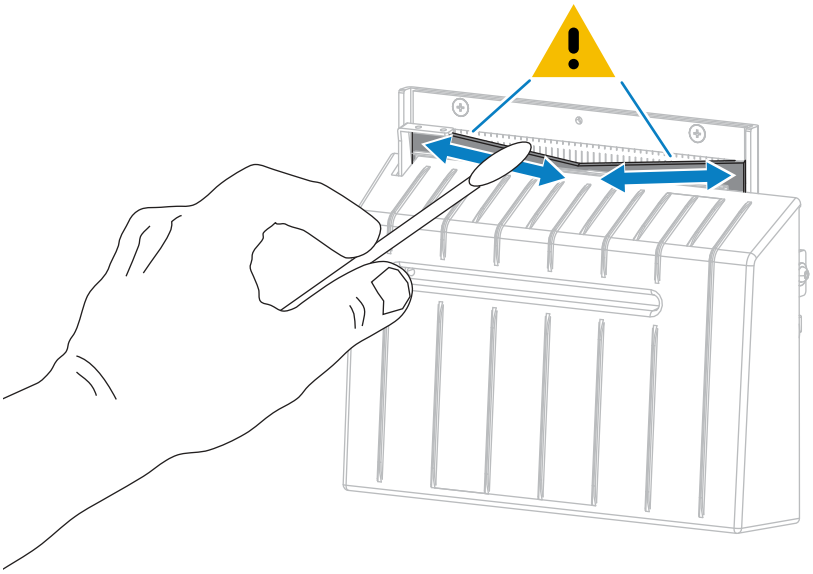

10. When the solvent has evaporated, soak a clean swab in a general-purpose, higher-viscosity silicone or PTFE oil lubricant.

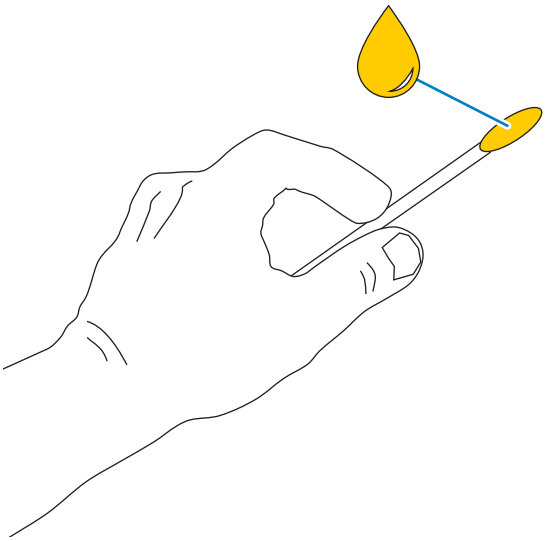

11. Apply an even layer along all exposed surfaces of both cutter blades. Remove any excess oil so that none of it comes in contact with the printhead or platen roller.

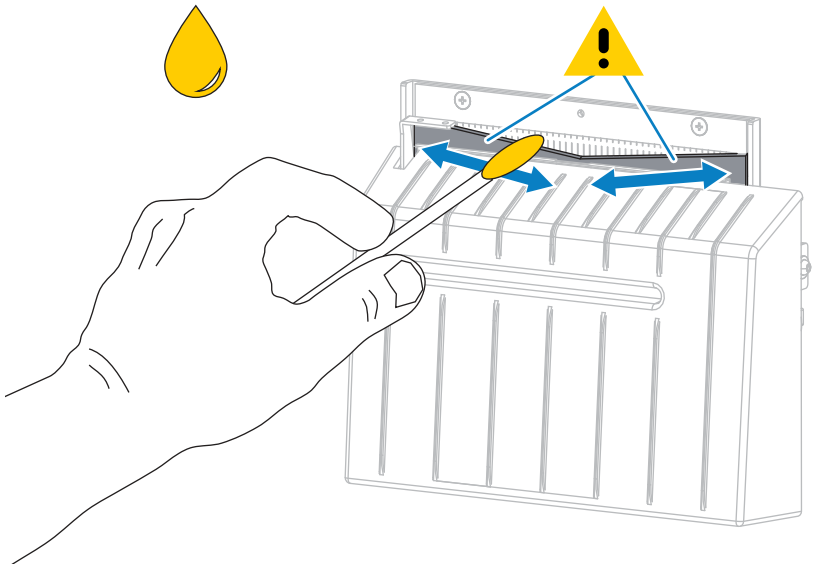

**CAUTION:** The cutter blade is sharp. For operator safety, replace the cutter shield.

12. Replace the cutter shield and secure it with the thumbscrew and lock washer that you removed earlier.

**CAUTION:** The cutter blade is sharp. For operator safety, replace the cutter shield.

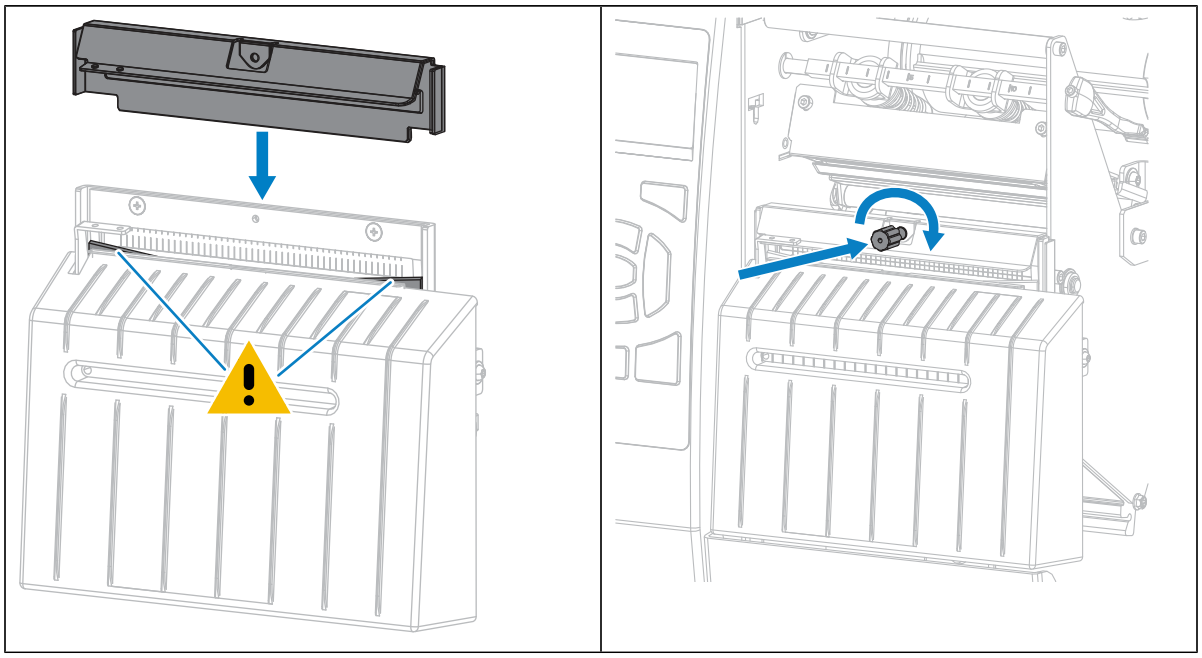

13. Reinstall the media.

**14.** Close the media door.

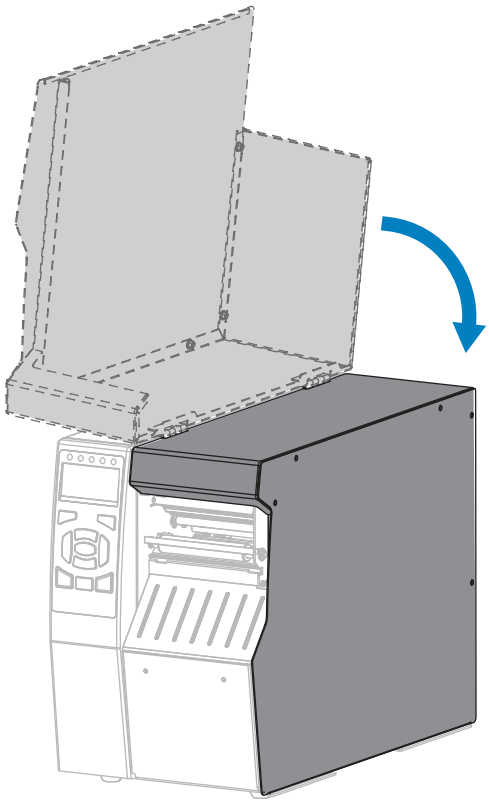

**15.** Plug the printer into its power source, and then turn on (I) the printer.

The cutter blade returns to its operating position.

**16.** Reinstall the cutter catch tray (if used).

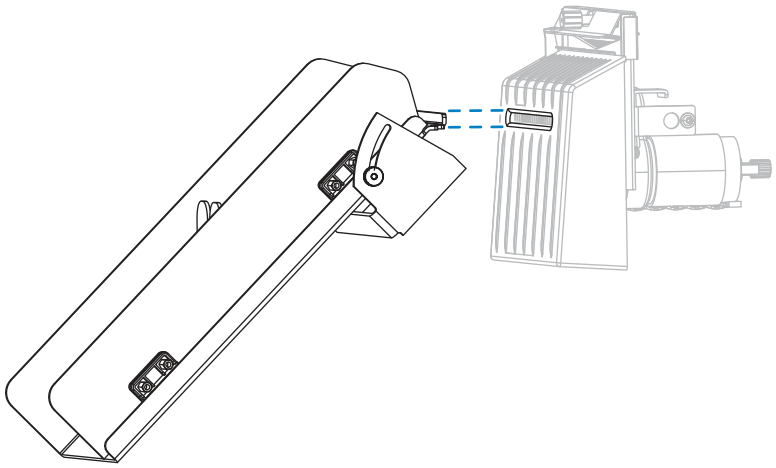

**17.** If the cutter continues to perform unsatisfactorily, contact an authorized service technician.

# Replacing Printer Components

Some printer components, such as the printhead and platen roller, may wear out over time and can be replaced easily. Regular cleaning may extend the life of some of these components.

For more information on recommended cleaning intervals, see Cleaning Schedule and Procedures on page 158.

## Ordering Replacement Parts

For optimal printing quality and proper printer performance across our product line, Zebra strongly recommends the use of genuine Zebra supplies as part of the total solution. Specifically, the ZT510 printers are designed to work only with genuine Zebra printheads, thus maximizing safety and print quality.

Contact your authorized Zebra reseller for part ordering information.

## Recycling Printer Components

The majority of this printer's components are recyclable. The printer's main logic board may include a battery that you should dispose of properly.

Do not dispose of any printer components in unsorted municipal waste. Please dispose of the battery according to your local regulations, and recycle the other printer components according to your local standards. For more information, see zebra.com/environment.

# Ordering Supplies

For optimal printing quality and proper printer performance across our product line, Zebra strongly recommends the use of Zebra Certified Supplies as part of the total solution. A wide range of paper, polypropylene, polyester, and vinyl stock has been specifically engineered to enhance the printing capabilities of the printer and to prevent premature printhead wear.

To purchase supplies, go to zebra.com/supplies.

# Lubrication

The only lubrication needed for this printer is for the cutter module.

Follow the instructions in Cleaning and Lubricating the Cutter Module on page 164. Do not lubricate any other parts of the printer.

**CAUTION:** Some commercially available lubricants will damage the finish and the mechanical parts if used on this printer.

# Diagnostics and Troubleshooting

This section provides diagnostic tests and other information that may help you to optimize printing or to troubleshoot issues with your printer.

For videos of some common procedures, go to zebra.com/zt500-info.

## Accessing a QuickHelp Page

With many alerts or error messages, the printer includes the option to view a QuickHelp page from a smartphone. When this option is available, the lower right-hand corner of the alert or error message displays QR.

1. While the message is on the screen, press **RIGHT SELECT** to select QR.

   The printer displays a QuickHelp page specific to that error message. This page includes a QR code, such as this.

2. Scan the QR code with a smartphone.

   Your phone accesses either a video specific to that error message or the Zebra support page for your printer.

## Evaluating Barcode Quality

The figure below shows how printer settings such as darkness and print speed can affect the quality of the printed barcodes.

Set the print darkness to the lowest setting that delivers good print quality. The Print Test Format Option on page 176 and FEED Self Test on page 180 can help you determine the most optimal settings.

**Figure 15** Barcode Darkness Comparison

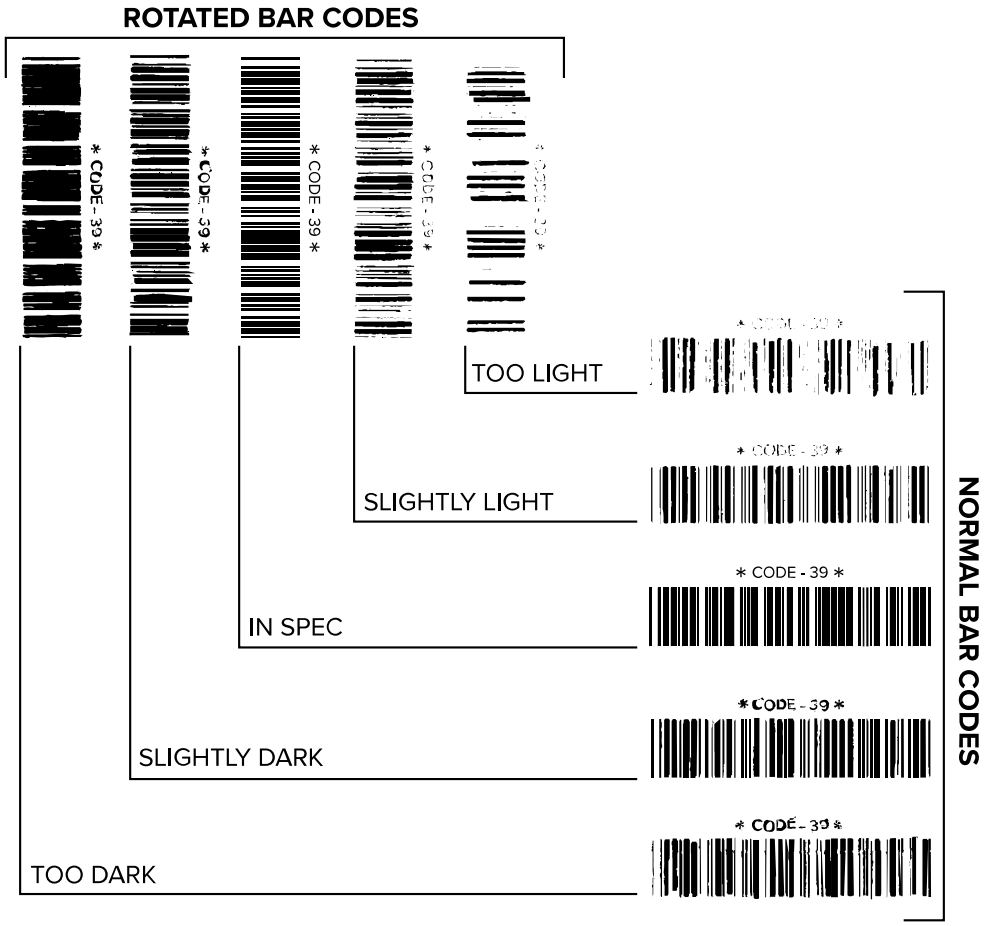


| Appearance | Description |
|---|---|
| Too dark labels | Fairly obvious. These may be readable but are not “in-spec.”<br>• The normal barcode bars increase in size.<br>• The openings in small alphanumeric characters may fill in with ink.<br>• Rotated barcode bars and spaces run together. |
| Slightly dark labels | Not as obvious as the too-dark labels.<br>• The normal barcode will be “in-spec.”<br>• Small alphanumeric characters will be bold, and may appear slightly filled in.<br>• The rotated barcode spaces are small when compared to the “in-spec” code, possibly making the code unreadable. |
| “In-spec” labels | Whether or not a label is “in-spec” can only be confirmed by a verifier, but they typically exhibit some visible characteristics.<br>• The normal barcode will have complete, even bars along with clear, distinct spaces. |

| Appearance | Description |
|---|---|
| | • The rotated barcode will have complete, even bars along with clear, distinct spaces. Although it may not look as good as a slightly dark barcode, the barcode will be “in-spec.”<br>• In both normal and rotated styles, small alphanumeric characters will look complete. |
| Slightly light labels | In some cases, these are preferred to slightly dark ones for “in-spec” barcodes.<br>• Both normal and rotated barcodes will be “in-spec,” but small alphanumeric characters may not be complete. |
| Too light labels | These are obvious.<br>• Both normal and rotated barcodes have incomplete bars and spaces.<br>• Small alphanumeric characters are unreadable. |

# Printer Diagnostic Tests

Diagnostic tests provide specific information about the condition of the printer and its components. The resulting printouts provide information that helps to determine the optimal operating conditions for the printer as well as to troubleshoot any issues.

**IMPORTANT:** When performing the diagnostic tests in this section, do not send data to the printer from the host.

**NOTE:** For best results, use full-width media when performing these diagnostic tests. If your media is shorter than the image to be printed, the image extends onto multiple labels.

## Print Test Format Option

The option PRINT TEST FORMAT on page 118 can be used to print various labels that can assist you with troubleshooting or with making adjustments to your printer. This section describes the selections for this option.

### DARKNESS

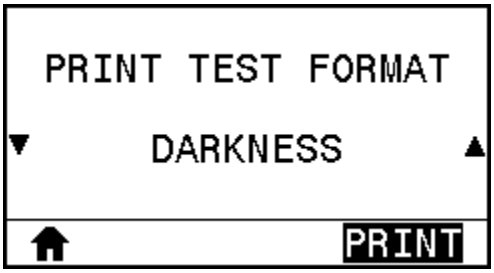


The printer repeats printing an image with incrementing darkness levels. Press **CANCEL** to stop the printing process at any time when the pattern is clear and legible.

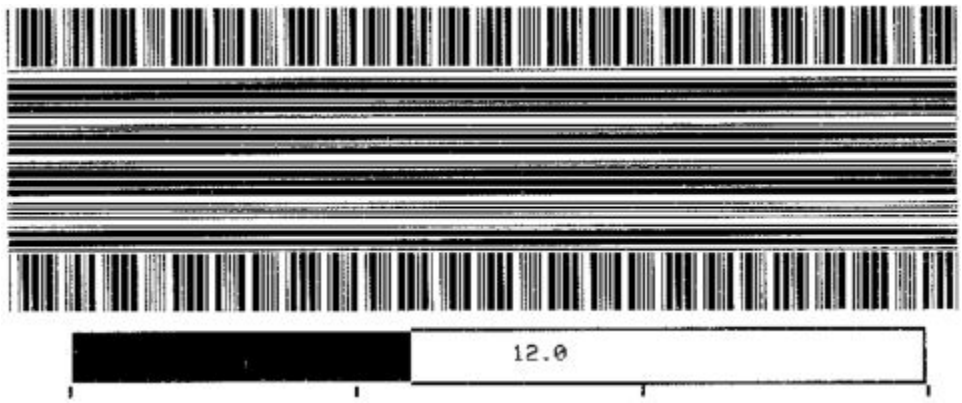


Use the numbers on the images to determine the best print darkness. If necessary, change your darkness setting to the one that gave you the best results on the above labels. (See DARKNESS on page 97.)

## FIRST DOT LOCATION

If necessary, the printer prints an image to assist you with adjusting the position of the image on your labels.

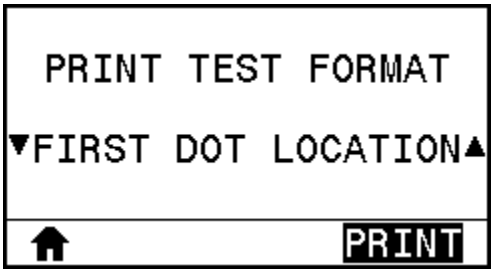


The lines on the image print from the label top and left edge to identify what should be the top-left corner of the label.

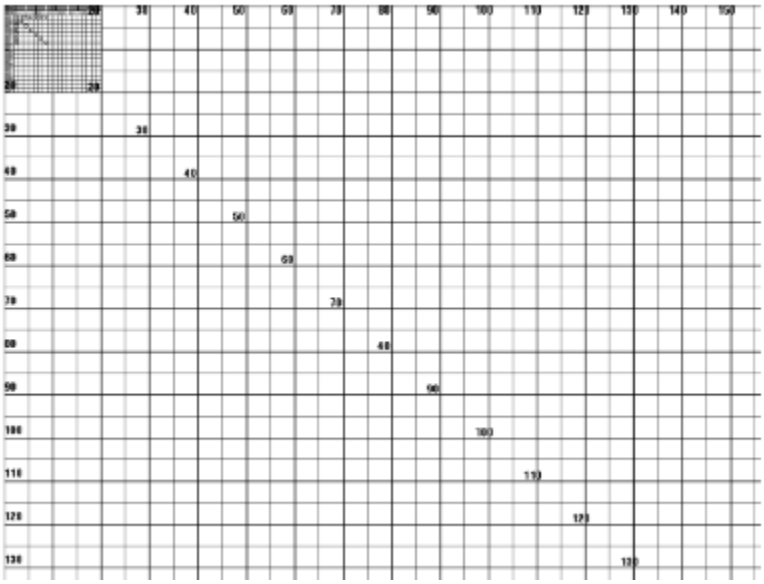

If necessary, use TEAR OFF on page 99 and LEFT POSITION on page 102 to adjust the image location.

## PRINT LINE

The printer initiates a test sequence that prints an ink/printhead test image multiple times and at varying speeds.

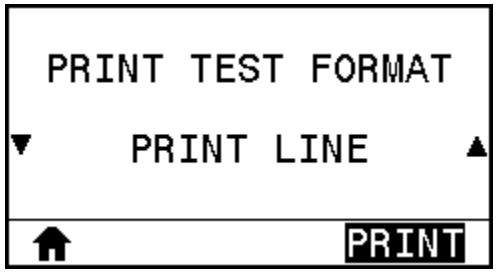


These test labels can be used when making adjustments to the printer's mechanical assemblies or to determine if any printhead elements are not working.

During each phase of the test sequence, the printer prints a number of labels at a particular speed and then pauses.

- Press **PAUSE** to print additional labels at the same speed.
- Press **CANCEL** to move to the next phase of the test sequence.
- Press and hold **CANCEL** to exit the test sequence.

| Phase | Number of Labels Printed Each Time | Print Speed |
|---|---|---|
| 1 | 15 labels | the printer's slowest speed |
| 2 | 15 labels | 6 in. (152 mm) per second |
| 3 | 50 labels | the printer's slowest speed |
| 4 | 50 labels | 6 in. (152 mm) per second |
| 5 | 50 labels | the printer's maximum speed |

As an alternate way to initiate the PRINT LINE test sequence, reboot the printer while holding **PAUSE**. Release **PAUSE** when the first control panel light turns off. (Formerly called a PAUSE self test.)

## IMAGE COMPRESSION

The printer prints an image with diagonal lines, circles, and hash marks at regular intervals around the edges of the image to assist with issues regarding compression or stretching of an image.

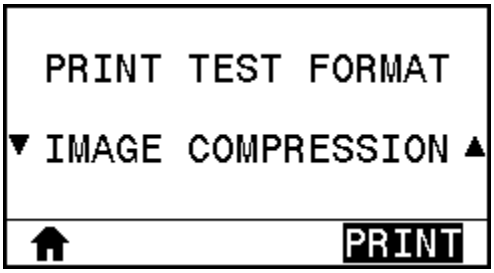


You can measure the distance between the hash marks or compare the circles and lines to verify if things are being distorted.

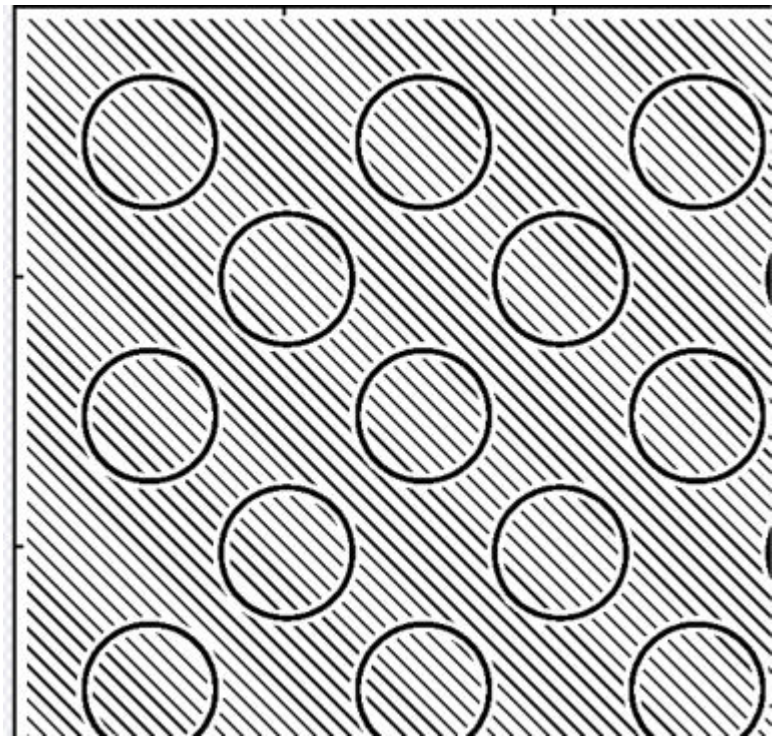

## ELEMENT OUT

The printer prints a horizontal image designed to show if a printhead element is not functioning.

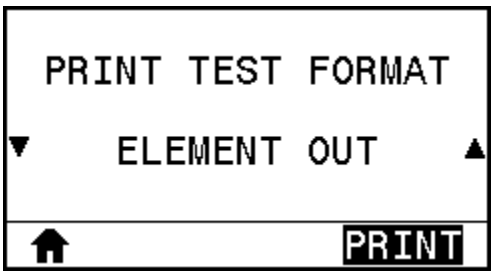

## FEED Self Test

Different types of media may require different darkness settings. This section contains a simple but effective method for determining the ideal darkness for printing bar codes that are within specifications.

During the FEED self test, labels are printed at different darkness settings at two different print speeds. The relative darkness and the print speed are printed on each label. The bar codes on these labels may be ANSI-graded to check print quality. During this test, one set of labels is printed at 2 ips, and another set is printed at 6 ips.

The darkness value starts at three settings lower than the printer's current darkness value (relative darkness of –3) and increase until the darkness is three settings higher than the current darkness value (relative darkness of +3).

1. Print a configuration label to show the printer's current settings.
2. Turn off (O) the printer.

3. Press and hold **FEED** while turning on (I) the printer. Hold **FEED** until the first control panel light turns off.

   The printer prints a series of labels at various speeds and at darkness settings higher and lower than the darkness value shown on the configuration label.

4. See Evaluating Barcode Quality on page 174. Inspect the test labels and determine which one has the best print quality for your application. If you have a barcode verifier, use it to measure bars/spaces and calculate the print contrast. If you do not have a barcode verifier, use your eyes or the system scanner to choose the optimal darkness setting based on the labels printed in this self test.
5. Note the relative darkness value and the print speed printed on the best test label.
6. Add or subtract the relative darkness value from the darkness value specified on the configuration label. The resulting numeric value is the best darkness value for that specific label/ribbon combination and print speed.
7. If necessary, change the darkness value to the darkness value on the best test label.
8. If necessary, change the print speed to the same speed as on the best test label.

## Communication Diagnostics Test

The communication diagnostics test is a troubleshooting tool for checking the interconnection between the printer and the host computer. When the printer is in diagnostics mode, it prints all data received from the host computer as straight ASCII characters with the hex values below the ASCII text. The printer prints all characters received, including control codes such as CR (carriage return). Here is an example of a typical test label from this test.

**NOTE:** The test label prints upside-down.

**Figure 16** Communications Diagnostics Test Label

```
^FS^FO394,25^AA
5E 46 53 5E 46 4F 33 39 34 2C 32 35 5E 41 41
N,18,10^FD(0000
4E 2C 31 38 2C 31 30 5E 46 44 28 30 30 30 30
)999-9999^FS
29 39 39 39 2D 39 39 39 39 5E 46 53 0D 0A
^FO0,50^AAN,18,
5E 46 4F 30 2C 35 30 5E 41 41 4E 2C 31 38 2C
10^FDCENTER STA
31 30 5E 46 44 43 45 4E 54 45 52 20 53 54 41
```

1. Set the print width equal to or less than the label width being used for the test. See PRINT WIDTH on page 100 for more information.
2. Set the **DIAGNOSTICS MODE** option to **ENABLED**. See DIAGNOSTIC MODE on page 112 for more information.

   The printer enters diagnostics mode and prints any data received from the host computer on a test label.
3. Check the test label for error codes. For any errors, check that your communication parameters are correct.

   Errors show on the test label as follows:

   - FE indicates a framing error.
   - OE indicates an overrun error.
   - PE indicates a parity error.
   - NE indicates noise.
4. To exit this self test and return to normal operation, power cycle the printer or set the DIAGNOSTIC MODE option to DISABLED.

## Sensor Profile

Use the sensor profile image (which will extend across several actual labels or tags) to troubleshoot the following situations:

- The printer experiences difficulty in determining gaps (web) between labels.

- The printer incorrectly identifies preprinted areas on a label as gaps (web).
- The printer cannot detect ribbon.

With the printer in the Ready state, print a sensor profile in one of these ways:

| | |
|---|---|
| Using the buttons on the control panel | **1.** Turn off (O) the printer.<br>**2.** Press and hold **FEED** + **CANCEL** while turning on (I) the printer.<br>**3.** Hold **FEED** + **CANCEL** until the first control panel light turns off. |
| Using ZPL | Send the ~JG command to the printer. See the Zebra Programming Guide for more information about this command. |
| ZT230 printer only | **1.** On the control panel display, navigate to the following item under the SENSORS menu. See #unique_165/unique_165_Connect_42_i1007764 for information about using the control panel and accessing the menus. See the User Guide for information about using the control panel and accessing the menus.<br>PRINT INFORMATION<br>▼ SENSOR PROFILE ▲<br>PRINT<br>**2.** Press **RIGHT SELECT** to select PRINT. |

Compare your results to the examples shown in this section. If the sensitivity of the sensors must be adjusted, calibrate the printer (see Calibrating the Ribbon and Media Sensors on page 140).

**Ribbon Sensor Profile**

The line labeled RIBBON (1) on the sensor profile indicates the ribbon sensor readings. The ribbon sensor threshold setting is indicated by OUT (2). If the ribbon readings are below the threshold value, the printer does not acknowledge that ribbon is loaded.

**Figure 17** Sensor Profile (Ribbon Section)

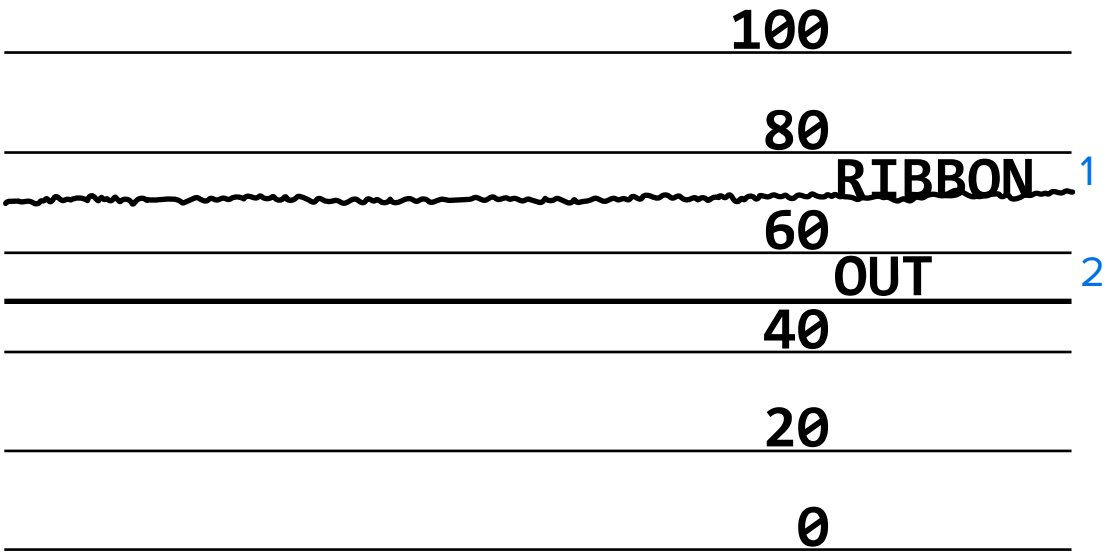


### Media Sensor Profile

The line labeled MEDIA (1) on the sensor profile indicates the media sensor readings. The media sensor threshold settings is indicated by WEB (2). The media out threshold is indicated by OUT (3). The upward or downward spikes (4) indicate divisions between labels (the web, notch, or black mark), and the lines between the spikes (5) indicate where labels are located.

If you compare the sensor profile printout to a length of your media, the spikes should be the same distance apart as the gaps on the media. If the distances are not the same, the printer may be having difficulty determining where the gaps are located.

**Figure 18** Media Sensor Profile (Gap/Notch Media)

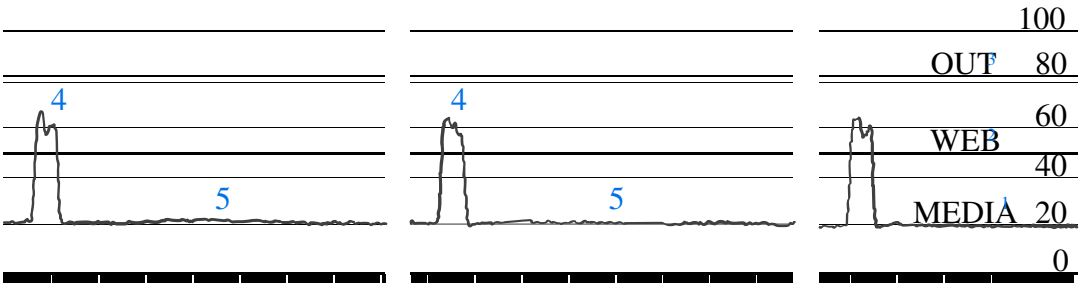


**Figure 19** Media Sensor Profile (Black Mark Media)

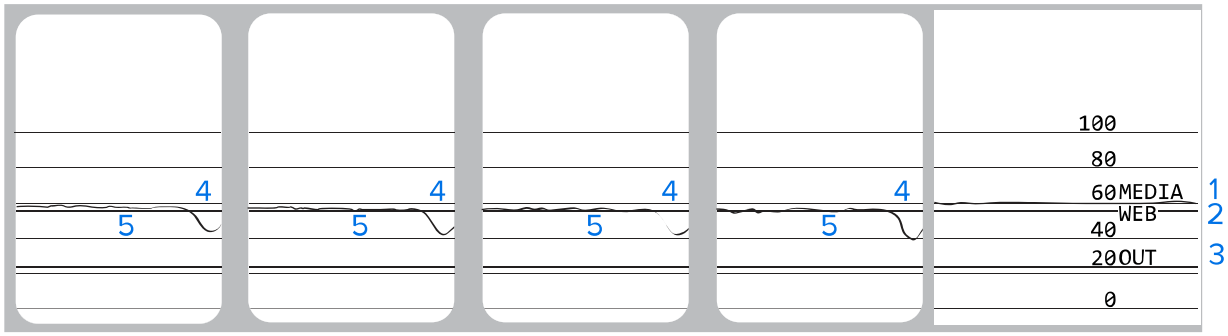

# Meaning of Indicator Lights

The indicator lights on the control panel show the current status of the printer. The control panel indicates the printer's current status and allows the user to control basic printer operation.

**Table 4** Status of Printer As Shown by Indicator Lights

| Indicator Lights | Status |
|---|---|
| STATUS PAUSE DATA SUPPLIES NETWORK | STATUS light steady green (other lights steady yellow for 2 seconds during printer power-up). The printer is ready. |
| STATUS PAUSE DATA SUPPLIES NETWORK | PAUSE light steady yellow. The printer is paused. |
| STATUS PAUSE DATA SUPPLIES NETWORK | STATUS light steady red. SUPPLIES light steady red. The media supply is out. The printer needs attention and cannot continue without user intervention. |
| STATUS PAUSE DATA SUPPLIES NETWORK | STATUS light steady red. SUPPLIES light flashing red. The ribbon supply is out. The printer needs attention and cannot continue without user intervention. |
| STATUS PAUSE DATA SUPPLIES NETWORK | STATUS light steady yellow. SUPPLIES light flashing yellow. The printer is in Direct Thermal mode, which does not require ribbon; however, ribbon is installed in the printer. |
| STATUS PAUSE DATA SUPPLIES NETWORK | STATUS light steady red. PAUSE light steady yellow. The printhead is open. The printer needs attention and cannot continue without user intervention. |
| STATUS PAUSE DATA SUPPLIES NETWORK | STATUS light steady yellow. The printhead is over temperature.<br>**CAUTION:** The printhead may be hot and could cause severe burns. Allow the printhead to cool. |
| STATUS PAUSE DATA SUPPLIES NETWORK | STATUS light flashing yellow. This indicator light flashing indicates one of the following: The printhead is under temperature. The power supply is over temperature. The main logic board (MLB) is over temperature. |
| STATUS PAUSE DATA SUPPLIES NETWORK | STATUS light steady red. PAUSE light steady red. DATA light steady red. The printhead was replaced with one that is not a genuine Zebra printhead. Install a genuine Zebra printhead to continue. |
| STATUS PAUSE DATA SUPPLIES NETWORK | STATUS light flashing red. The printer is unable to read the dpi setting of the printhead. |
| Printers with a ZebraNet wired Ethernet option | |
| STATUS PAUSE DATA SUPPLIES NETWORK | NETWORK light off. No Ethernet link is available. |
| STATUS PAUSE DATA SUPPLIES NETWORK | NETWORK light steady green. A 100Base-T link was found. |

**Table 4** Status of Printer As Shown by Indicator Lights (Continued)

| Indicator Lights | Status |
|---|---|
| STATUS PAUSE DATA SUPPLIES NETWORK | NETWORK light steady yellow. A 10Base-T link was found. |
| STATUS PAUSE DATA SUPPLIES NETWORK | NETWORK light steady red. An Ethernet error condition exists. The printer is not connected to your network. |
| Printers with a ZebraNet wireless option | |
| STATUS PAUSE DATA SUPPLIES NETWORK<br>STATUS PAUSE DATA SUPPLIES NETWORK<br>STATUS PAUSE DATA SUPPLIES NETWORK | NETWORK light off. A radio was found during power-up. The printer is attempting to associate with the network. The light flashes red while the printer associates with the network. The light then flashes yellow while the printer is authenticating with the network. |
| STATUS PAUSE DATA SUPPLIES NETWORK | NETWORK light steady green. The radio is associated with your network and authenticated, and the WLAN signal is strong. |
| STATUS PAUSE DATA SUPPLIES NETWORK | NETWORK light flashing green. The radio is associated with your network and authenticated, but the WLAN signal is weak. |
| STATUS PAUSE DATA SUPPLIES NETWORK | NETWORK light steady red. A WLAN error condition exists. The printer is not connected to your network. |

# Troubleshooting

This section provides information about errors that you might need to troubleshoot. Assorted diagnostic tests are included.

## Alerts and Error Messages

Review the display or indicator lights, review the possible causes, and implement a recommended solution.

**Table 5** Error Messages

| Display/Indicator Lights | Possible Cause | Recommended Solution |
|---|---|---|
| HEAD OPEN<br>CLOSE HEAD<br><br>STATUS light steady red<br>PAUSE light steady yellow | The printhead is not fully closed. | Close the printhead completely. |
| | The printhead open sensor is not working properly. | Call a service technician to replace the sensor. |
| MEDIA OUT<br>LOAD MEDIA<br><br>STATUS light steady red<br>SUPPLIES light steady red | The media is not loaded or is loaded incorrectly. | Load media correctly. See Load the Media on page 44. |
| | Misaligned media sensor. | Check the position of the media sensor. |
| | The printer is set for noncontinuous media, but continuous media is loaded. | Install the proper media type, or reset printer for the current media type.<br>Calibrate the printer.<br>See Calibrating the Ribbon and Media Sensors on page 140. |
| WARNING<br>RIBBON IN<br><br>STATUS light steady yellow<br>SUPPLIES light flashing yellow | Ribbon is loaded, but the printer is set for direct thermal mode. | Ribbon is not required with direct thermal media. If you are using direct thermal media, remove the ribbon. This error message will not affect printing. |
| | | If you are using thermal transfer media, which requires ribbon, set the printer for Thermal Transfer mode. See PRINT METHOD on page 98. |
| ALERT<br>RIBBON OUT<br><br>STATUS light steady red<br>SUPPLIES light flashing yellow | In thermal transfer mode:<br>• ribbon is not loaded<br>• ribbon is loaded incorrectly<br>• the ribbon sensor is not detecting ribbon<br>• media is blocking the ribbon sensor | Load ribbon correctly. See Loading the Ribbon on page 75.Calibrate the printer. See Calibrating the Ribbon and Media Sensors on page 140. |

**Table 5** Error Messages (Continued)

| Display/Indicator Lights | Possible Cause | Recommended Solution |
|---|---|---|
| | In thermal transfer mode, the printer did not detect the ribbon even though it is loaded correctly. | Print a sensor profile (see PRINT INFORMATION on page 104). The ribbon out threshold (2) is likely too high, above the line that indicates where the ribbon is detected (1).<br> 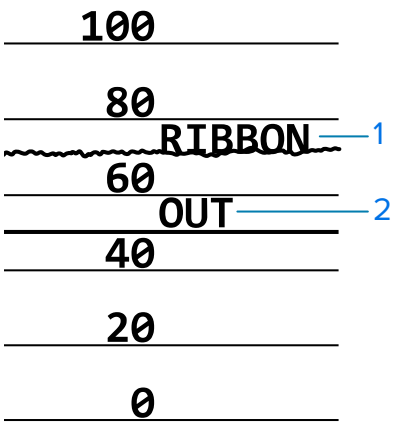 <br><br>Calibrate the printer (see Calibrating the Ribbon and Media Sensors on page 140) or load printer defaults (see LOAD DEFAULTS on page 111). |
| | If you are using direct thermal media, the printer is waiting for ribbon to be loaded because it is incorrectly set for thermal transfer mode. | Set the printer for Direct Thermal mode. |
| PH NOT AUTHENTICATED<br>REPLACE PRINT HEAD<br>STATUS light steady red<br>PAUSE light steady red<br>DATA light steady red | The printhead was replaced with one that is not a genuine Zebra printhead. | Install a genuine Zebra printhead. |

**Table 5** Error Messages (Continued)

| Display/Indicator Lights | Possible Cause | Recommended Solution |
|---|---|---|
| PRINT HEAD OVERTEMP<br>PRINTING HALTED<br><br>STATUS light steady yellow | The printhead is over temperature. | Allow the printer to cool. Printing automatically resumes when the printhead elements cool to an acceptable operating temperature.<br>If this error persists, consider changing where the printer is located or using a slower print speed. |
| HEAD COLD<br>PRINTING HALTED<br><br>THERMISTOR<br>REPLACE PRINTHEAD<br><br>STATUS light steady yellow<br>The printer shows one of these messages or cycles between them. | **CAUTION:** An improperly connected printhead data or power cable can cause these error messages. The printhead may be hot enough to cause severe burns. Allow the printhead to cool. | |
| | The printhead data cable is not properly connected. | Call a service technician to hook up the printhead properly. |
| | The printhead has a faulty thermistor. | Call a service technician to replace the printhead. |
| HEAD COLD<br>PRINTING HALTED<br><br>STATUS light flashing yellow | **CAUTION:** An improperly connected printhead data or power cable can cause this error message. The printhead may be hot enough to cause severe burns. Allow the printhead to cool. | |
| | The printhead temperature is approaching its lower operating limit. | Continue printing while the printhead reaches the correct operating temperature. If the error remains, the environment may be too cold for proper printing. Relocate the printer to a warmer area. |
| | The printhead data cable is not properly connected. | Call a service technician to hook up the printhead properly. |
| | The printhead has a faulty thermistor. | Call a service technician to replace the printhead. |

**Table 5** Error Messages (Continued)

| Display/Indicator Lights | Possible Cause | Recommended Solution |
|---|---|---|
| CUT ERROR<br><br>STATUS light steady red<br>PAUSE light steady yellow | **CAUTION:** The cutter blade is sharp. Do not touch or rub the blade with your fingers. | |
| | The cutter blade is in the media path. | Turn off the printer power and unplug the printer. Inspect the cutter module for debris and clean as needed following the cleaning instructions in Cleaning and Lubricating the Cutter Module on page 164. |
| USE USB MEMORY DEVICE?<br>YES NO | The USB host port is disabled, and a USB device was plugged into the port. | To use the USB device, select YES, or send the following SGD command to the printer:<br>`! U1 setvar "usb.host.lock_out" "on"`<br>`"usb.host.lock_out" "on"` |
| OUT OF MEMORY STORING GRAPHIC<br><br>OUT OF MEMORY STORING FORMAT<br><br>OUT OF MEMORY STORING BITMAP<br><br>HEAD COLD PRINTING FONT | There is not enough memory to perform the function specified on the second line of the error message. | Free up some of the printer's memory by adjusting the label format or printer parameters. One way to free up memory is to adjust the print width to the actual width of the label instead of leaving the print width set to the default. See PRINT WIDTH on page 100. |
| | | Ensure that the data is not directed to a device that is not installed or is unavailable. |
| | | If the problem persists, call a service technician. |

## Printing Issues

This table identifies possible issues with printing or print quality, the possible causes, and the recommended solutions

**Table 6** Printing Issues

| Issue | Possible Cause | Recommended Solution |
|---|---|---|
| General print quality issues | The printer is set at the incorrect print speed. | For optimal print quality, set the print speed to the lowest possible setting for your application via control panel, the driver, or the software. You may want to perform the FEED Self Test on page 180 to determine the optimal settings for your printer.<br>See PRINT SPEED on page 97 for how to change the print speed. |
| | You are using an incorrect combination of labels and ribbon for your application. | Switch to a different type of media or ribbon to try to find a compatible combination.If necessary, consult your authorized Zebra reseller or distributor for information and advice. |
| | The printer is set at an incorrect darkness level. | For optimal print quality, set the darkness to the lowest possible setting for your application. You may want to perform the FEED Self Test on page 180 to determine the ideal darkness setting.<br>See DARKNESS on page 97 for how to change the darkness setting. |
| | The printhead is dirty. | Clean the printhead and platen roller. See Cleaning the Printhead and Platen Roller on page 160. |
| | Incorrect or uneven printhead pressure. | Set the printhead pressure to the minimum needed for good print quality. See Adjust the Printhead Pressure and Toggle Position on page 146. |
| Loss of printing registration on labels. Excessive vertical drift in top-of-form registration. | The platen roller is dirty. | Clean the printhead and platen roller. See Cleaning the Printhead and Platen Roller on page 160. |
| | Media guides are positioned improperly. | Ensure that the media guides are properly positioned. See Load the Media on page 44. |
| | The media type is set incorrectly. | Set the printer for the correct media type (gap/notch, continuous, or mark). See MEDIA TYPE on page 98. |
| | The media is loaded incorrectly. | Load media correctly. See Load the Media on page 44. |

**Table 6** Printing Issues (Continued)

| Issue | Possible Cause | Recommended Solution |
|---|---|---|
| Long tracks of missing print on several labels | Print element damaged. | Call a service technician. |
| | Wrinkled ribbon. | See wrinkled ribbon causes and solutions in Ribbon Issues on page 194. |
| Fine, angular gray lines on blank labels | Wrinkled ribbon. | See wrinkled ribbon causes and solutions in Ribbon Issues on page 194. |
| Printing too light or too dark over the entire label | The media or ribbon is not designed for high-speed operation. | Replace supplies with those recommended for high-speed operation. |
| | You are using an incorrect combination of media and ribbon for your application. | Switch to a different type of media or ribbon to try to find a compatible combination.If necessary, consult your authorized Zebra reseller or distributor for information and advice. |
| | You are using ribbon with direct thermal media. | Direct thermal media does not require ribbon. To determine if you are using direct thermal media, perform the label scratch test in When to Use Ribbon. |
| | Incorrect or uneven printhead pressure. | Set the printhead pressure to the minimum needed for good print quality. See Adjust the Printhead Pressure and Toggle Position on page 146. |
| Smudge marks on labels | The media or ribbon is not designed for high-speed operation. | Replace supplies with those recommended for high-speed operation. |
| Misregistration/skips labels | The printer is not calibrated. | Calibrate the printer. See Calibrating the Ribbon and Media Sensors. |
| | Improper label format. | Check your label format and correct it as necessary. |
| Misregistration and misprint of one to three labels | The platen roller is dirty. | Clean the printhead and platen roller. See Cleaning the Printhead and Platen Roller on page 160. |
| | Media does not meet specifications. | Use media that meets specifications. See Media Specifications. |
| Vertical drift in top-of-form position | The printer is out of calibration. | Calibrate the printer. See Calibrating the Ribbon and Media Sensors. |
| | The platen roller is dirty. | Clean the printhead and platen roller. See Cleaning the Printhead and Platen Roller on page 160. |

**Table 6** Printing Issues (Continued)

| Issue | Possible Cause | Recommended Solution |
|---|---|---|
| Vertical image or label drift | The printer is using non-continuous labels but is configured in continuous mode. | Set the printer for the correct media type (gap/notch, continuous, or mark—see MEDIA TYPE on page 98) and calibrate the printer, if necessary (see Calibrating the Ribbon and Media Sensors). |
| | The media sensor is calibrated improperly. | Calibrate the printer. See Calibrating the Ribbon and Media Sensors. |
| | The platen roller is dirty. | Clean the printhead and platen roller. See Cleaning the Printhead and Platen Roller on page 160. |
| | Improper printhead pressure settings (toggles). | Adjust the printhead pressure to ensure proper functionality. See Adjust the Printhead Pressure and Toggle Position on page 146. |
| | The media or ribbon is loaded incorrectly. | Ensure that the media and ribbon are loaded correctly. See Loading the Ribbon on page 75 and Load the Media on page 44. |
| | Incompatible media. | You must use media that meets the printer specifications. Ensure that the interlabel gaps or notches are 2 to 4 mm and consistently placed (see Media Specifications on page 219). |
| The bar code printed on a label does not scan. | The bar code is not within specifications because the print is too light or too dark. | Perform the Evaluating Barcode Quality on page 174. Adjust the darkness or print speed settings as necessary. |
| | There is not enough blank space around the bar code. | Leave at least 1/8 in. (3.2 mm) between the bar code and other printed areas on the label and between the bar code and the edge of the label. |
| Auto Calibrate failed. | The media or ribbon is loaded incorrectly. | Ensure that the media and ribbon are loaded correctly. See Loading the Ribbon on page 75 and Load the Media on page 44. |
| | The sensors could not detect the media or ribbon. | Calibrate the printer. See Calibrating the Ribbon and Media Sensors. |
| | The sensors are dirty or positioned improperly. | Ensure that the sensors are clean and properly positioned. |
| | The media type is set incorrectly. | Set the printer for the correct media type (gap/notch, continuous, or mark). See MEDIA TYPE on page 98. |

## Ribbon Issues

This table identifies problems that may occur with ribbon, the possible causes, and the recommended solutions

For videos of some common procedures, go to zebra.com/zt500-info.

**Table 7** Ribbon Problems

| Problem | Possible Cause | Recommended Solution |
|---|---|---|
| Broken or melted ribbon | Darkness setting too high. | Reduce the darkness setting. See DARKNESS on page 97 for how to change the darkness setting. Clean the printhead thoroughly. See Cleaning the Printhead and Platen Roller on page 160. |
| | The ribbon is coated on the wrong side and cannot be used in this printer. | Replace the ribbon with one coated on the correct side. For more information, see Coated Side of Ribbon. |
| Wrinkled ribbon | Ribbon was loaded incorrectly. | Load the ribbon correctly. See Loading the Ribbon on page 75. |
| | Incorrect burn temperature. | For optimal print quality, set the darkness to the lowest possible setting for your application. You may want to perform the Evaluating Barcode Quality to determine the ideal darkness setting.<br>See DARKNESS on page 97 for how to change the darkness setting. |
| | Incorrect or uneven printhead pressure. | Set the printhead pressure to the minimum needed for good print quality. See Adjust the Printhead Pressure and Toggle Position on page 146. |
| | Media not feeding properly; “walking” from side to side. | Make sure that media is snug by adjusting the media guide, or call a service technician. |
| | The printhead or platen roller may be installed incorrectly. | Call a service technician. |
| The printer does not detect when the ribbon runs out. | The printer may have been calibrated without ribbon or without the ribbon loaded properly | Make sure that ribbon is loaded correctly so that it can be detected by the ribbon sensor. Under the printhead, the ribbon should track all the way back, near the printer’s firewall. See Loading the Ribbon on page 75.<br>Calibrate the printer. See Calibrating the Ribbon and Media Sensors on page 140. |
| In thermal transfer mode, the printer did not detect the ribbon even though it is loaded correctly. | | |
| The printer indicates that ribbon is out, even though ribbon is loaded correctly. | The printer was not calibrated for the label and ribbon being used. | |

## Printer Connectivity Issues

| Issue | Possible Cause | Recommended Solution |
|---|---|---|
| My printer reassigns a new IP address to the print server after the printer has been off for a while. | The settings for your network are causing the network to reassign a new IP address. | If the changing IP addresses cause issues for you, follow these steps to assign a static IP address to the printer:<br>**1.** Find out what values need to be assigned to the IP address, subnet mask, and gateway for your print server (wired, wireless, or both).<br>**2.** Change the appropriate IP protocol value to PERMANENT.<br>**3.** Change the values for the IP address, subnet mask, and gateway for the appropriate print server to what you want them to remain.<br>**4.** Reset the network using RESET NETWORK on page 128 to save the changes. |
| My printer does not obtain an IP address while trying to connect via LAN/ Ethernet. | The cable is not plugged in correctly. | Check that both ends of the cable are connected properly. |
| | The printer is not configured correctly (usually for DHCP). | Check the Wired IP Protocol setting. It should match your network environment. |
| I cannot change the wired, wireless, or Bluetooth settings on my printer. | The printer is in Protected Mode, which prevents these settings from being updated without the Protected Mode password. You cannot change these settings through the front panel. | You will need the Protected Mode password to change the settings via JSON commands. For more information, refer to the Zebra Link-OS PrintSecure Printer Administration Guide. |
| | For printers purchased in the EMEA region after August 1, 2025, many connectivity options are disabled by default. | For additional information and a configuration wizard, go to zebra.com/asr. |

| Issue | Possible Cause | Recommended Solution |
|---|---|---|
| I manually entered a wireless IP address, subnet, and gateway on my printer, but it won't connect to my wireless network. Protected Mode is not enabled. | The printer's network must be reset after values are changed. | Reset the network using RESET NETWORK on page 128 to save the changes. |
| | An ESSID value was not specified. | **1.** For a wireless connection, specify the ESSID value that matches the value used by your wireless router using the following Set/Get/Do command:<br>`! U1 setvar "wlan.essid" "value"`<br>where "value" is the ESSID (sometimes called a network SSID) for your router. You can look on the back of your router for a sticker with the router's default information.<br>**NOTE:** If the information has been changed from the default, check with your network administrator for the ESSID value to use.<br>**2.** Reset the network using RESET NETWORK on page 128 to save the changes. |
| | The ESSID or another value was incorrect. | **1.** Print a network configuration label and verify that your values are correct.<br>**2.** Make corrections as necessary.<br>**3.** Reset the network using RESET NETWORK on page 128 to save the changes. |

## Communication Issues

This table identifies problems with communications, the possible causes, and the recommended solutions.

**Table 8** Communications Problems

| Problem | Possible Cause | Recommended Solution |
|---|---|---|
| A label format was sent to the printer but was not recognized. The DATA light does not flash. | The communication parameters are incorrect. | Check the printer driver or software communications settings (if applicable). |
| | | If you are using serial communication, check the serial port settings. |
| | | If you are using serial communication, make sure that you are using a null modem cable or a null modem adapter. |
| | | Check the printer's handshake protocol setting. The setting used must match the one being used by the host computer. |

**Table 8** Communications Problems (Continued)

| Problem | Possible Cause | Recommended Solution |
|---|---|---|
| | | If a driver is used, check the driver communication settings for your connection. |
| A label format was sent to the printer. Several labels print, then the printer skips, misplaces, misses, or distorts the image on the label. | The serial communication settings are incorrect. | Ensure that the flow control settings match. |
| | | Check the communication cable length. See General Specifications on page 210 for requirements. |
| | | Check the printer driver or software communications settings (if applicable). |
| A label format was sent to the printer but was not recognized. The DATA light flashes but no printing occurs. | The prefix and delimiter characters set in the printer do not match the ones in the label format. | Verify the prefix and delimiter characters. See CONTROL CHAR on page 131 and DELIMITER CHAR on page 132. |
| | Incorrect data is being sent to the printer. | Check the communication settings on the computer. Ensure that they match the printer settings. |
| | | If the problem continues, check the label format. |

## Miscellaneous Issues

This table identifies miscellaneous issues with the printer, the possible causes, and the recommended solutions.

This table identifies miscellaneous issues with the printer, the possible causes, and the recommended solutions.

**Table 9** Miscellaneous Printer Problems

| Problem | Possible Cause | Recommended Solution |
|---|---|---|
| The printer is prompting for a front panel password/PIN, but one was not set. | The front panel display can be locked, limiting access to the control panel parameters until the front panel password is entered. This value is initially undefined and must be set before it can be used. | For more information about the front panel password, refer to the Zebra Link-OS PrintSecure Printer Administration Guide. |

**Table 9** Miscellaneous Printer Problems (Continued)

| Problem | Possible Cause | Recommended Solution |
|---|---|---|
| The control panel display shows a language that I cannot read | The language parameter was changed through the control panel or a firmware command. | **1.** On the control panel display, scroll to LANGUAGE Menu.<br>**2.** Press **OK** to access the items in this menu.<br>**3.** Use the **UP ARROW** or **DOWN ARROW** to scroll through the language selections. The selections for this parameter are displayed in the actual languages to make it easier for you to find one that you are able to read.<br>**4.** Select the language that you want to display. |
| The display is missing characters or parts of characters | The display may need replacing. | Call a service technician. |
| The printer is not acknowledging a USB device or is not reading the files on a USB device that is plugged into the USB host port. | The printer currently supports USB drives only up to 1 TB in size. | Use a USB drive that is 1 TB or smaller. |
| | The USB device may require its own external power. | If your USB device requires external power, make sure that it is plugged into a working power supply. |
| Changes in parameter settings did not take effect | Some parameters are set incorrectly. | **1.** Check the parameters and change or reset if necessary.<br>**2.** Turn the printer off (O) and then on (I). |
| | A firmware command turned off the ability to change the parameter. | Refer to the Programming Guide for ZPL, ZBI, Set-Get-Do, Mirror, and WML or call a service technician. |
| | A firmware command changed the parameter back to the previous setting. | |
| | If the problem persists, there may be a problem with the main logic board. | Call a service technician. |
| Auto Calibrate failed. | The media or ribbon is loaded incorrectly. | Ensure that the media and ribbon are loaded correctly. See Loading the Ribbon on page 75 and Load the Media on page 44. |
| | The sensors could not detect the media or ribbon. | Calibrate the printer manually. See Calibrating the Ribbon and Media Sensors on page 140. |

**Table 9** Miscellaneous Printer Problems (Continued)

| Problem | Possible Cause | Recommended Solution |
|---|---|---|
| | The sensors are dirty or positioned improperly. | Ensure that the sensors are clean and properly positioned. |
| | The media type is set incorrectly. | Set the printer for the correct media type (gap/notch, continuous, or mark). See MEDIA TYPE on page 98. |
| Non-continuous labels are being treated as continuous labels. | The printer was not calibrated for the media being used. | Calibrate the printer. See Calibrating the Ribbon and Media Sensors on page 140. |
| | The printer is configured for continuous media. | Set the printer for the correct media type (gap/notch, continuous, or mark). See MEDIA TYPE on page 98. |
| All indicator lights are on, nothing is on the display (if the printer has a display), and the printer locks up. | Internal electronic or firmware failure. | Call a service technician. |
| The printer locks up while running the Power-On Self Test. | Main logic board failure. | Call a service technician. |

# Using a USB Host Port and the Print Touch Feature

The exercises presented here will help you learn how to use the optional USB host port and the printer's Print Touch feature with an Android™-based NFC-enabled device (such as a smartphone or a tablet).

Some SGD commands are listed as part of these exercises for advanced users.

## Items Required for the Exercises

To perform the exercises in this document, you will need:

- a USB Flash drive that is up to 1 Terabyte (1 TB)

**NOTE:** The printer will not recognize drives larger than 1 TB.

- a USB keyboard.
- the various files listed in Files for Completing the Exercises.
- the free Zebra Utilities app for your smartphone (search for Zebra Technologies in the Google Play store).

## Files for Completing the Exercises

Most of the files you need to complete the exercises in these section are available on zebra.com in the form of a .ZIP file located here. Copy these files to your computer before you begin the exercises. Where possible, the contents of the files are shown. Contents of files that include coded content—which cannot be viewed either as text or as an image—are not included.

**File 1: `ZEBRA.BMP`**

**File 2: `SAMPLELABEL.TXT`**

This simple label format prints the Zebra logo and a line of text at the end of the mirroring exercise.

```
^XA
^FO100,75^XGE:zebra.bmp^FS
^FO100,475^A0N,50,50^FDMirror from USB Completed^FS
^XZ
```

**File 3: `LOGO.ZPL`**

**File 4: `USBSTOREDFILE.ZPL`**

This label format prints an image and text. This file will be stored on the USB memory device at the root level so that it can be printed.

```
CT~~CD,~CC^~CT~
^XA~TA012~JSN^LT0^LH0,0^JMA^PR4,4~SD15^LRN^CI0^XZ
~DG000.GRF,07680,024,,[image data]
^XA
^LS0
^SL0
^BY3,3,91^FT35,250^BCN,,Y,N^FC%,{,#^FD%d/%m/%Y^FS
^FT608,325^XG000.GRF,1,1^FS
^FT26,75^A0N,28,28^FH\^FDThis label was printed from a format stored^FS
^FT26,125^A0N,28,28^FH\^FDon a USB Flash Memory drive. ^FS
^BY3,3,90^FT33,425^BCN,,Y,N
^FD>:Zebra Technologies^FS
^PQ1,0,1,Y^XZ
^XA^ID000.GRF^FS^XZ
```

**File 5: `VLS_BONKGRF.ZPL`**

This file is included in the .ZIP file located here.

**File 6: `VLS_EIFFEL.ZPL`**

This file is included in the .ZIP file located here.

**File 7: `KEYBOARDINPUT.ZPL`**

This label format, used for the USB keyboard input exercise, does the following:

- creates a barcode with the current date, based on your Real-Time Clock (RTC) setting
- prints the Zebra logo graphic
- prints fixed text
- `^FN` prompts you to enter your name, and the printer prints what you entered

```
^XA
^CI28
^BY2,3,91^FT38,184^BCN,,Y,N^FC%,{,#^FD%d/%m/%Y^FS
^FO385,75^XGE:zebra.bmp^FS
^FT40,70^A0N,28,28^FH\^FDThis label was printed using a keyboard input. ^FS
^FT35,260^A0N,28,28^FH\^FDThis label was printed by:^FS
^FT33,319^A0N,28,28^FN1"Enter Name"^FS
^XZ
```

**File 8: `SMARTDEVINPUT.ZPL`**

This is the same label format as the previous label, only with different text printing. This format is used for the smart device input exercise.

```
^XA
^CI28
^BY2,3,91^FT38,184^BCN,,Y,N^FC%,{,#^FD%d/%m/%Y^FS
^FO385,75^XGE:zebra.bmp^FS
^FT40,70^A0N,28,28^FH\^FDThis label was printed using a smart device input.
 ^FS
^FT35,260^A0N,28,28^FH\^FDThis label was printed by:^FS
^FT33,319^A0N,28,28^FN1"Enter Name"^FS
^XZ
```

**File 9: Firmware File**

You may want to download a firmware file for your printer and copy it to your computer for use during the exercises. You may omit doing this if you wish.

You can download the latest firmware file from zebra.com/firmware.

# USB Host

Your printer may be equipped with one or two USB host ports on the front panel. A USB host port allows you to connect USB devices—such as a keyboard, scanner, or USB Flash drive—to the printer. The exercises in this section will teach you how to perform USB mirror, how to transfer files to and from the printer, and how to provide information for which you are prompted and then print a label using that information.

**IMPORTANT:** When using a USB host port, files should be named only with 1 to 16 alphanumeric characters (A, a, B, b, C, c, ..., 0, 1, 2, 3, ...). Do not use Asian characters, Cyrillic characters, or accented characters in file names.

**NOTE:** Some functions may not work properly if there are underscores in a file name. Use periods instead.

## Exercise 1: Copy Files to a USB Flash Drive and Perform USB Mirror

**NOTE:** For printers purchased in the EMEA region after August 1, 2025, mirroring (`usb.mirror.enable`) is disabled by default. You must enable it before you can complete this exercise. For more information, refer to the Zebra Link-OS PrintSecure Printer Administration Guide.

1. On your USB Flash Drive, create the following:

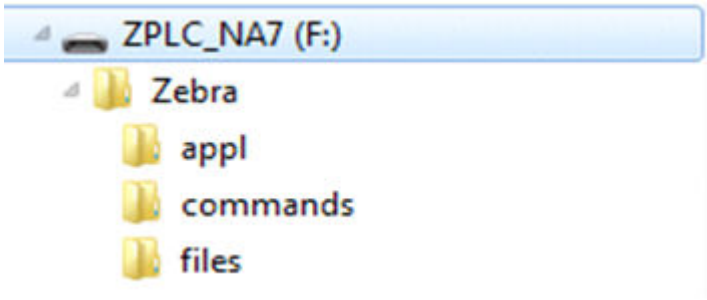


   - a folder called `Zebra`
   - in that folder, three subfolders:
     - `appl`
     - `commands`
     - `files`
2. In the `/appl` folder, place a copy of the latest firmware for your printer.
3. In the `/files` folder, place the following file:

   File 1: ZEBRA.BMP on page 201
4. In the `/commands` folder, place the following files:
   - File 2: SAMPLELABEL.TXT on page 201
   - File 3: LOGO.ZPL on page 201
5. Insert the USB Flash drive into a USB host port on the front of your printer.

6. Observe the control panel and wait.

   The following should happen:

   - If the firmware on the USB Flash drive is different than what is on the printer, the firmware downloads to the printer. The printer then restarts and prints a printer configuration label. (If there is no firmware on the USB Flash drive or if the firmware version is the same, the printer skips this action.)
   - The printer downloads the files in the `/files` folder and briefly shows the names of the files that are downloading on the display.
   - The printer executes any files in the `/commands` folder.
   - The printer restarts and then displays this message: `MIRROR PROCESSING FINISHED`

7. Remove the USB Flash drive from the printer.

| Advance User Information | |
|---|---|
| See the Zebra Programming Guide for more information about these commands. | |
| To enable/disable mirroring: | `! U1 setvar "usb.mirror.enable" "value"`<br>Values: `"on"` or `"off"` |
| To enable/disable automatic mirroring that occurs when a USB Flash drive is inserted into the USB host port: | `! U1 setvar "usb.mirror.auto" "value"`<br>Values: `"on"` or `"off"` |
| To specify the number of times that the mirror operation will be repeated if it fails: | `! U1 setvar "usb.mirror.error_retry" "value"`<br>Values: `0` to `65535` |
| To change the path to the location on the USB device from which mirror files are retrieved: | `! U1 setvar "usb.mirror.appl_path" "new_path"`<br>Default: `"zebra/appl"` |
| To change the path to the location on the printer from which mirror files are retrieved: | `! U1 setvar "usb.host.lock_out" "value"`<br>Default: `"zebra"` |
| To enable/disable the ability to use the USB port: | `! U1 setvar "usb.host.lock_out" "value"`<br>Values: `"on"` or `"off"` |

## Exercise 2: Print a Label Format from a USB Flash Drive

The Print USB File option allows you to print files from a USB mass storage device, such as a USB Flash drive. Only printable files (`.ZPL` and `.XML`) may be printed from the USB mass storage device, and the files must be located at the root level, not in a directory.

1. Copy the following files to your USB Flash drive:
   - `File 4: USBSTOREDFILE.ZPL` on page 201
   - `File 5: VLS_BONKGRF.ZPL` on page 201
   - `File 6: VLS_EIFFEL.ZPL` on page 201
2. Insert the USB Flash drive into a USB host port on the front of your printer.
3. On the printer's control panel, press the **LEFT SELECT** button (below the home icon ) to access the printer's Home Menu.
4. Use the **ARROW** buttons to scroll to the Tools menu.
5. Press **OK**.
6. Use the ARROW buttons to scroll to PRINT USB FILE.

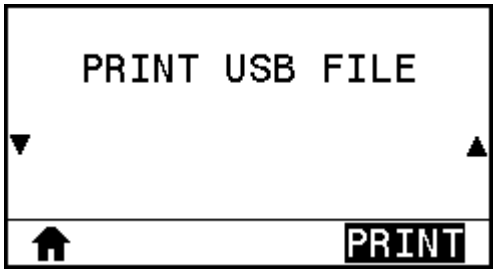


   The printer loads any executable files and processes them. The available files are listed. **SELECT ALL** is available to print all files on the USB Flash drive.
7. If necessary, use the up and down arrow to select `USBSTOREDFILE.zpl`
8. Press the **RIGHT SELECT** button to select **PRINT**.

   The label prints.

## Exercise 3: Copy Files to/from a USB Flash Drive

The Copy USB File option allows you to copy files from a USB mass storage device to the printer's Flash memory E: drive.

1. Copy the following files to the root directory of your USB Flash drive.
   - `File 7: KEYBOARDINPUT.ZPL` on page 202
   - `File 8: SMARTDEVINPUT.ZPL` on page 202

**NOTE:** Do not put these files into a subfolder.

2. Insert the USB Flash drive into a USB host port on the front of your printer.
3. On the printer's control panel, press the **LEFT SELECT** button to access the printer's Home Menu.
4. Use the **ARROW** buttons to scroll to the Tools menu.

5. Press **OK**.
6. Use the **ARROW** buttons to scroll to **COPY USB FILE TO E:**.

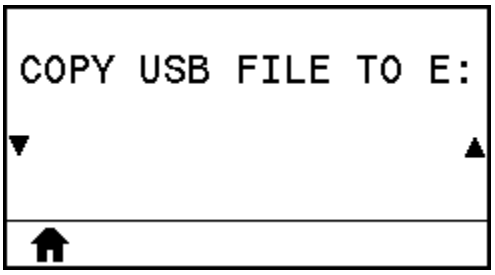


The printer loads any executable files and processes them. The available files are listed. SELECT ALL is available to copy all of the available files from the USB Flash drive.

7. If necessary, use the UP or DOWN ARROW to select the file STOREFMT.ZPL.
8. Press the **RIGHT SELECT** button to select **STORE**.

   The printer stores the file in E: memory. All file names are converted to uppercase.
9. Repeat this process to select the file STOREFMTM1.ZPL.
10. Press the **RIGHT SELECT** button to select **STORE**.

    The printer stores the file in E: memory.
11. Remove the USB Flash drive from the USB host port.

**NOTE:** You can now copy these files from the printer to a USB Flash drive using the user menu item STORE E: FILE TO USB.

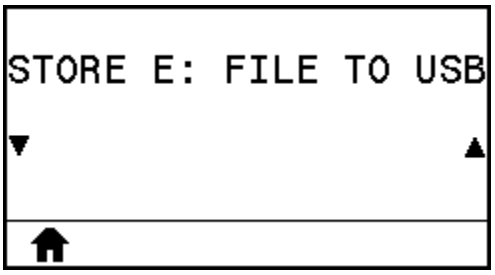


The option **SELECT ALL** is available to store all of the available files from the printer to the USB Flash drive. Any `.ZPL` file that is copied will be post-processed such that the contents of the file will be suitable to be sent to a printer for normal execution.

## Exercise 4: Enter Data for a Stored File with a USB Keyboard and Print a Label

The Print Station feature allows you to use a USB Human Interface Device (HID), such as a keyboard or a barcode scanner, to enter `^FN` field data into a `*.ZPL` template file.

1. After performing the previous exercise, plug a USB keyboard into a USB host port.
2. Use the **ARROW** buttons to scroll to the Tools menu.
3. Press **OK**.

4. Use the **ARROW** buttons to scroll to **PRINT STATION**.

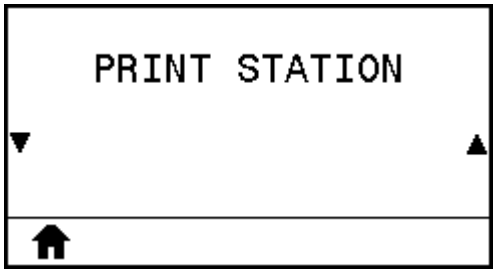


   The printer loads any executable files and processes them. The available files are listed.

5. If necessary, use the **UP** and **DOWN ARROW** buttons to select the file `KEYBOARDINPUT.ZPL`.
6. Press the **RIGHT SELECT** button to choose **SELECT**.

   The printer accesses the file and prompts you for the information in the `^FN` fields in the file. In this case, it prompts you for your name.

7. Type your name on the keyboard, and then press **<ENTER>**.

   The printer prompts for the number of labels to print.

8. Specify the desired quantity of labels, then press **<ENTER>** again.

   The specified number of labels is printed, with your name in the appropriate fields.

## Near Field Communication (NFC)

The Zebra Print Touch™ feature allows you to touch an Android™-based, NFC-enabled device (such as a smart phone or tablet) to the printer's NFC logo to pair the device to the printer. This capability allows you to use your device to provide information for which you are prompted and then print a label using that information.

**IMPORTANT:** Some devices may not support NFC communication with the printer until you alter their settings. If you encounter difficulties, consult your service provider or your smart device manufacturer for more information.

**Figure 20** NFC Logo Location

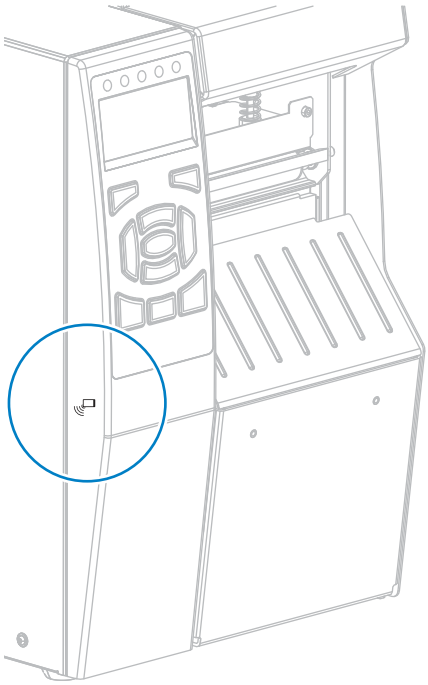

## Exercise 5: Enter Data for a Stored File with a Smart Device and Print a Label

The steps in this exercise may vary somewhat based on:

- your device (phone or tablet)
- your service provider
- whether you already have the free Zebra Utilities app installed on your device

Refer to the Zebra Bluetooth User Guide for specific instructions for configuring your printer to use a Bluetooth interface. A copy of this manual is available at zebra.com/manuals.

1. Copy the `SMARTDEVINPUT.ZPL` file to your device.
2. If you do not have the Zebra Utilities app installed on your device, go to the app store for your device, search for the Zebra Setup Utilities app, and install it.

3. If your phone supports NFC, pair your device with the printer by holding the device next to the NFC icon on the printer. Otherwise, pair using the Bluetooth settings on your device.

   a) If necessary, access the Bluetooth information about your printer using your device. For instructions, refer to the manufacturer's documentation for your device.

   b) If necessary, select the Zebra printer's serial number to pair it with the device.

   c) After your device has been detected by the printer, the printer may prompt you to accept or reject the pairing. If necessary, tap **ACCEPT**. Some devices will pair with the printer without this prompt.

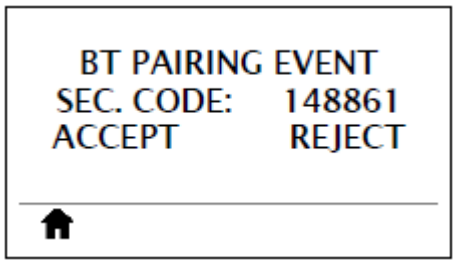


   The printer and your device are paired.

4. Start the Zebra Utilities app on your device.

   The Zebra Utilities main menu displays.

5. Tap **Available Files**.

   The smart device gets data from the printer and displays it.

**NOTE:** This retrieval process may take a minute or more to complete.

6. Scroll through the formats shown and select `SMARTDEVINPUT.ZPL`.

   Based on the `^FN` field in the label format, the device prompts you for your name.

7. Enter your name at the prompt.

8. Change the quantity of labels to print, if desired.

9. Tap **Send to Printer** to print the label.

# Specifications

This section lists general printer, printing, power, wireless, ribbon, and media specifications.

## General Specifications

This table displays general specifications of the printer.

| | | |
|---|---|---|
| Height | | 395.68 mm (15.58 in.) |
| Width | | 268.2 mm (10.56 in.) |
| Depth | | 512.3 mm (20.17 in.) |
| Weight | | 22.7 kg (50 lb) |
| Temperature | Operating | Thermal Transfer: 5° to 40°C (40° to 104°F) Direct Thermal: 0° to 40°C (32° to 104°F) |
| | Storage | –30° to 60°C (–22° to 140°F) |
| Relative Humidity | Operating | 20% to 85%, non-condensing |
| | Storage | 20% to 85%, non-condensing |
| Communication Interface Specifications | Standard | Bluetooth® LE<br>• Limitations and Requirements<br>  • Many mobile devices can communicate with the printer within a 30-foot radius of the printer.<br>• Connections and Configuration<br>  • Refer to the Zebra Bluetooth User Guide for specific instructions for configuring your printer to use a Bluetooth interface. A copy of this manual is available here. |

| | | |
|---|---|---|
| | | Zebra PrintTouch/Near Field Communication (NFC)<br>For more information, see Using a USB Host Port and the Print Touch Feature on page 200.<br>• Limitations and Requirements<br>  • NFC communication must be initiated by touching your device to the appropriate location on the printer.<br>• Connections and Configuration<br>  • Some devices may not support NFC communication with the printer until you alter their settings. |
| | | USB 2.0 Data Interface<br>• Limitations and Requirements<br>  • Maximum cable length of 5 m (16.4 ft).<br>• Connections and Configuration<br>  • No additional configuration is necessary. |
| | | Wired Gigabit Internal Ethernet Print Server<br>• Limitations and Requirements<br>  • The printer must be configured to use your LAN.<br>  • A second wired print server can be installed in the bottom option slot.<br>• Connections and Configuration<br>  • Refer to the ZebraNet Wired and Wireless Print Servers User Guide for configuration instructions. A copy of this manual is available here. |

| | | |
|---|---|---|
| | | RS-232/C Serial Data Interface<br>• 2400 to 115000 baud<br>• parity, bits/character<br>• 7 or 8 data bit<br>• XON-XOFF, RTS/CTS, or DTR/DSR handshake protocol required<br>•<br>• Limitations and Requirements<br>  • You must use a null-modem cable to connect to the printer or a null-modem adapter if using a standard modem cable.<br>  • Maximum cable length of 15.24 m (50 ft).<br>  • You may need to change printer parameters to match the host computer.<br>• Connections and Configuration<br>  • The baud rate, number of data and stop bits, the parity, and the XON/XOFF or DTR control must match those of the host computer. |
| | Optional | Wireless print server<br>For more information, see Wireless Specifications on page 217.<br>• Limitations and Requirements<br>  • Can print to the printer from any computer on your Wireless Local Area Network (WLAN).<br>  • Can communicate with the printer through the printer's web pages.<br>  • The printer must be configured to use your WLAN.<br>  • Can be installed only in the top option slot.<br>• Connections and Configuration<br>  • Refer to the ZebraNet Wired and Wireless Print Servers User Guide for configuration instructions. A copy of this manual is available here. |

| | | |
|---|---|---|
| | | USB host port<br>For more information, see Using a USB Host Port and the Print Touch Feature on page 200.<br>• Limitations and Requirements<br>  • You can only plug one device into the USB host port. You cannot use a third device by plugging it into a USB port on one of the devices, nor can you use an adapter to split the USB host port on the printer to accept more than one device at a time.<br>• Connections and Configuration<br>  • No additional configuration is necessary. |
| | | IEEE 1284 Bidirectional Parallel data interface<br>• Limitations and Requirements<br>  • Maximum cable length of 3 m (10 ft).<br>  • Recommended cable length of 1.83 m (6 ft).<br>  • No printer parameter changes required to match the host computer.<br>  • Can be installed in either the top or bottom option slot.<br>• Connections and Configuration<br>  • No additional configuration is necessary. |
| | | External ZebraNet 10/100 Print Server<br>• Requires the parallel data interface option |
| Memory | | 1 Gigabyte DRAM (32 MB user available)<br>2 Gigabyte Flash (512 MB user available on-board Flash) |

## Power Specifications

This table displays the electrical and power consumption information of the printer.

| | |
|---|---|
| Electrical | 100–240 VAC, 50-60 H |
| Power Consumption | 120 VAC, 60 Hz |
| Inrush Current (Irms) | 37.0 |
| Idle Power (Watts) | 7.0 |
| Idle Power (VA) | 13.1 |
| Sleep Power (Watts) | 3.0 |
| Sleep Power (VA) | 10.4 |
| Print Power (Watts) | 123.0 |
| Print Power (VA) | 130.0 |

## Power Cord Specifications

**CAUTION:** For personnel and equipment safety, always use an approved three-conductor power cord specific to the region or country intended for installation. This cord must use an IEC 320 female connector and the appropriate region-specific, three-conductor grounded plug configuration.

Depending on how your printer was ordered, a power cord may or may not be included. If one is not included or if the one included is not suitable for your requirements, refer to the following guidelines:

- The overall cord length must be less than 9.8 ft. (3 m).
- The cord must be rated for at least 10 A, 250 V.
- The chassis ground (earth) must be connected to ensure safety and reduce electromagnetic interference.

**Figure 21** Power Cord Specifications

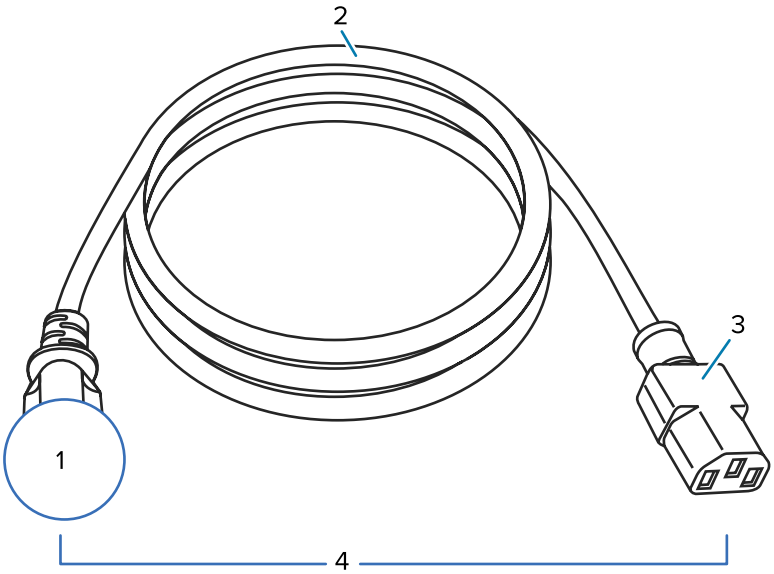


| | |
|---|---|
| 1 | AC power plug for your country—This should bear the certification mark of at least one of the known international safety organizations. |
| 2 | 3-conductor HAR cable or other cable approved for your country. |
| 3 | IEC 320 connector—This should bear the certification mark of at least one of the known international safety organizations. |
| 4 | Length ≦ 9.8 ft. (3 m). Rating 10 Amp, 250 VAC. |

**Figure 22** International Safety Organization Certification Symbols

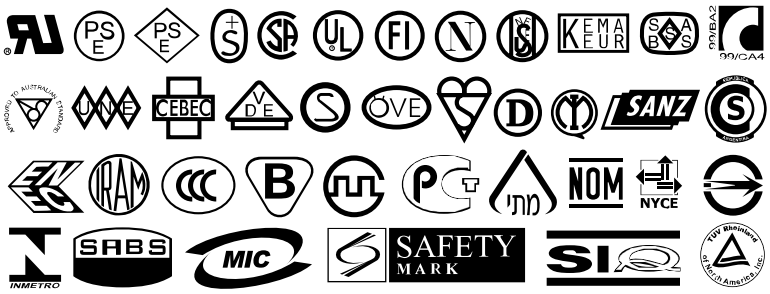

# Communication Interface Specifications

This section describes standard and optional specifications.

**Figure 23** Location of Communication Interfaces

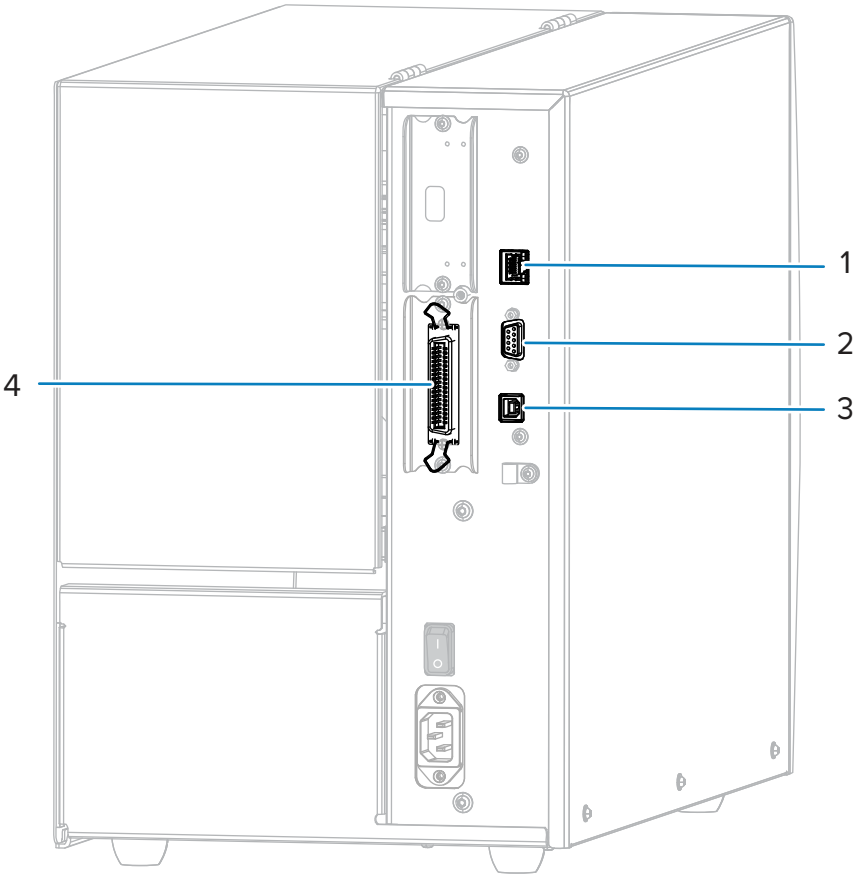


| | |
|---|---|
| 1 | Internal wired Ethernet print server |
| 2 | Serial port |
| 3 | USB port |
| 4 | Parallel port |

**NOTE:** You must supply all data cables for your application. The use of cable strain relief clamps is recommended.

Ethernet cables do not require shielding, but all other data cables must be fully shielded and fitted with metal or metalized connector shells. Unshielded data cables may increase radiated emissions above the regulated limits.

To minimize electrical noise pickup in the cable:

- Keep data cables as short as possible.
- Do not bundle the data cables tightly with the power cords.
- Do not tie the data cables to power wire conduits.

# Wireless Specifications

This section displays wireless information about the printer.

**Antenna Information**

- Type = Patch
- Gain = 3.66dBi @ 2.4GHz
- Gain = 3.19dBi @ 5GHz
- Impedance = 50 ohms

**WLAN Specifications**

**NOTE:** For printers purchased in the EMEA region after August 1, 2025, WLAN is disabled by default. To enable the WLAN option, refer to the Zebra Link-OS PrintSecure Printer Administration Guide.

| | |
|---|---|
| 802.11 b | • 2.4 GHz<br>• DSSS (DBPSK, DQPSK and CCK)<br>• RF power 17.77 dBm (EIRP) |
| 802.11 g | • 2.4 GHz<br>• OFDM (16-QAM and 64-QAM with BPSK and QPSK)<br>• RF power 18.61 dBm (EIRP |
| 802.11 n | • 2.4 GHz<br>• RF power 18.62 dBm (EIRP)<br>• OFDM (16-QAM and 64-QAM with BPSK and QPSK) |
| 802.11 a/n | • 5.15-5.25 GHz, 5.25-5.35 GHz, 5.47-5.725 GHz<br>• OFDM (16-QAM and 64-QAM with BPSK and QPSK)<br>• RF power 17.89 dBm (EIRP) |
| 802.11 ac | • 5.15-5.25 GHz, 5.25-5.35 GHz, 5.47-5.725 GHz<br>• OFDM (16-QAM and 64-QAM with BPSK and QPSK)<br>• RF power 13.39 dBm (EIRP) |
| Bluetooth 4.1 + Low Energy (LE) | • 2.4 GHz<br>• FHSS (BDR/EDR), GFSK (Bluetooth Low Energy)<br>• RF power 9.22 dBm (EIRP) |
| Bluetooth Low Energy (LE) | • 2.4 GHz<br>• FHSS (BDR/EDR), DSSS (Bluetooth LE)<br>• RF power –0.85 dBm (EIRP) |

# Printing Specifications

This table displays printing specifications about the printer.

| | | |
|---|---|---|
| Print resolution | | 203 dpi (dots/in.)/8 dots/mm |
| | | 300 dpi/12 dots/mm |
| Maximum print width | | 104 mm (4.09 in.) |
| Programmable constant print speeds (inches per second/ips or millimeters per second) | 203 dpi | 51 to 305 mm (2 to 12 in.) per second in 25.4 mm (1-in.) increments |
| | 300 dpi | 51 to 254 mm (2 to 10 in.) per second in 25.4 mm (1-in.) increments |
| Dot size (nominal) (width x length) | 203 dpi | 0.125 mm x 0.125 mm (0.0049 in. x 0.0049 in.) |
| | 300 dpi | 0.084 mm x 0.099 mm (0.0033 in. x 0.0039 in.) |
| First dot location (measured from the inside edge of the media) | 203 dpi | 3.5 mm ±1.25 mm (0.14 in. ±0.05 in.) |
| | 300 dpi | 2.1 mm ±1.25 mm (0.08 in. ±0.05 in.) |
| Barcode modulus (X) dimension | | |
| Picket fence (non-rotated) orientation | 203 dpi | 4.9 mil to 49 mil |
| | 300 dpi | 3.3 mil to 33 mil |
| Ladder (rotated) orientation | 203 dpi | 4.9 mil to 49 mil |
| | 300 dpi | 3.9 mil to 39 mil |
| Vertical registration | 6 ips | ±0.75 mm |
| | > 6 ips | ±1.5 mm |
| Horizontal registration | | ±1.5 mm |

# Media Specifications

This table displays media information for the printer.

| | | |
|---|---|---|
| Label length MINIMUM | Tear-off | 18 mm (0.7 in.) |
| | Rewind | 6 mm (0.25 in) |
| | Peel-off | 13 mm (0.5 in) |
| | Cutter | 38 mm (1.5 in.) |
| Label length MAXIMUM | Non-continuous media | 991 mm (39 in.) |
| | Using cutter catch tray | 216 mm (8.5 in.) |
| Print length MAXIMUM (continuous media) | 200 dpi | 3810 mm (150 in.) |
| | 300 dpi | 2540 mm (100 in.) |
| Label width MINIMUM | | 20 mm (0.79 in.) |
| Label width MAXIMUM (label and liner) | | 114 mm (4.5 in.) |
| Total thickness MINIMUM (includes liner, if any) | | 0.076 mm (0.003 in.) |
| Total thickness MAXIMUM (includes liner, if any) | Cutter | 0.23 mm (0.009 in.) |
| | Other | 0.30 mm (0.012 in.) |
| Roll outside diameter MAXIMUM | | 203 mm (8 in.) on a 76-mm (3-in.) inside diameter core |
| Inter-label gap | Minimum | 2 mm (0.079 in.) |
| | Preferred | 3 mm (0.118 in.) |
| | Maximum | 4 mm (0.157 in.) |
| Ticket/tag notch size (width x length) | | 6 mm x 3 mm (0.25 in. x 0.12 in.) |
| Sensing hole diameter | | 3 mm (0.125 in.) |
| Black mark density, in Optical Density Units (ODU) | | > 1.0 ODU |
| Media density MAXIMUM (black mark) | | 0.5 ODU |
| Black mark length (parallel to inside media edge) | | 3 to 11 mm (0.12 to 0.43 in.) |
| Black mark width (perpendicular to inside media edge) | | > 11 mm (> 0.43 in.) |
| Black mark location | | within 1 mm (0.040 in.) of inside media edge |

## Ribbon Specifications

Standard printers use ribbon that is coated on the outside. An optional ribbon spindle is available to use ribbon that is coated on the inside. Contact your authorized Zebra reseller for ordering information.

| | |
|---|---|
| Ribbon width MINIMUM * ** | 20 mm (0.79 in.) |
| Ribbon width MAXIMUM | 110 mm (4.33 in.) |
| Ribbon length MAXIUMUM | 450 m (1476 ft) |
| Ribbon core inside diameter | 25 mm (1 in.) |
| Ribbon roll outside diameter MAXIMUM | 81.3 mm (3.2 in.) |

* Zebra recommends using ribbon that is at least as wide as the media to protect the printhead from wear.

** Depending on your application, you may be able to use ribbon narrower than 51 mm (2 in.), as long as the ribbon is wider than the media being used. To use a narrower ribbon, test the ribbon's performance with your media to assure that you get the desired results.

# Glossary

A list of terms used in this guide are defined here.

## alphanumeric

Indicating letters, numerals, and characters such as punctuation marks.

## backfeed

When the printer pulls the media and ribbon (if used) backward into the printer so that the beginning of the label to be printed is properly positioned behind the printhead. Backfeed occurs when operating the printer in Tear-Off and Applicator modes.

## barcode

A code by which alphanumeric characters can be represented by a series of adjacent stripes of different widths. Many different code schemes exist, such as the universal product code (UPC) or Code 39.

## black mark media

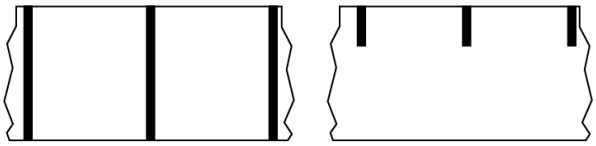

Media with registration marks found on the underside of the print media that act as start-of-label indications for the printer. The reflective media sensor is the generally-selected option for use with black mark media.

Contrast this with continuous media on page 222 or gap/notch media on page 224.

## calibration (of a printer)

## collection method

Select a media collection method that is compatible with your printer options. Selections include tear-off, peel-off, cutter, and rewind. The basic media and ribbon loading instructions are the same for all collection methods with some additional steps necessary for using any media collection options.

## configuration

The printer configuration is a group of operating parameters specific to the printer application. Some parameters are user selectable, while others are dependent on the installed options and mode of operation. Parameters may be switch selectable, control panel programmable, or downloaded as ZPL II commands. A configuration label listing all the current printer parameters may be printed for reference.

## continuous media

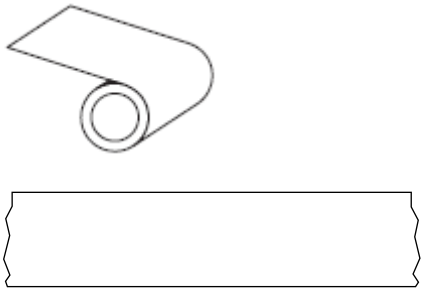

A transmissive (gap) sensor is typically used for the printer to detect when the media runs out.

Contrast this with black mark media on page 221 or gap/notch media on page 224.

## core diameter

The inside diameter of the cardboard core at the center of a roll of media or ribbon.

## diagnostics

Information about which printer functions are not working that is used for troubleshooting printer problems.

## die-cut media

A type of label stock that has individual labels stuck to a media liner. The labels may be lined up against each other or separated by a small distance. Typically the material surrounding the labels has been removed. (See non-continuous media on page 226.)

## direct thermal

A printing method in which the printhead presses directly against the media. Heating the printhead elements causes a discoloration of the heat-sensitive coating on the media. By selectively heating the printhead elements as the media moves past, an image is printed onto the media. No ribbon is used with this printing method.

Contrast this with thermal transfer on page 229.

## direct thermal media

Media that is coated with a substance that reacts to the application of direct heat from the printhead to produce an image.

## fanfold media

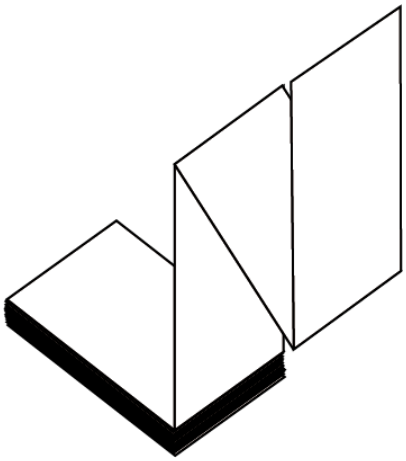

Non-continuous media that comes folded in a rectangular stack and folded in a zigzag pattern. Fanfold media is either gap-notch media or black mark media, meaning it uses black marks or notches to track media format positioning.

Fanfold media can have the same label separations as non-continuous roll media. The separations fall either on or near the folds.

Contrast this with roll media on page 228.

## firmware

This is the term used to specify the printer's operating program. This program is downloaded to the printer from a host computer and stored in flash memory. Each time the printer power is turned on, this operating program starts. This program controls when to feed the media  forward or backward and when to print a dot on the label stock.

## FLASH memory

Non-volatile memory that maintains the stored information intact when power is off. This memory area is used to store the printer's operating program. Can also be used to store optional printer fonts, graphic formats, and complete label formats.

## font

A complete set of alphanumeric characters in one style of type. Examples include CG Times™, CG Triumvirate Bold Condensed™.

## gap/notch media

Media that contains a separation, notch, or hole, indicating where one label/printed format ends and the next begins.

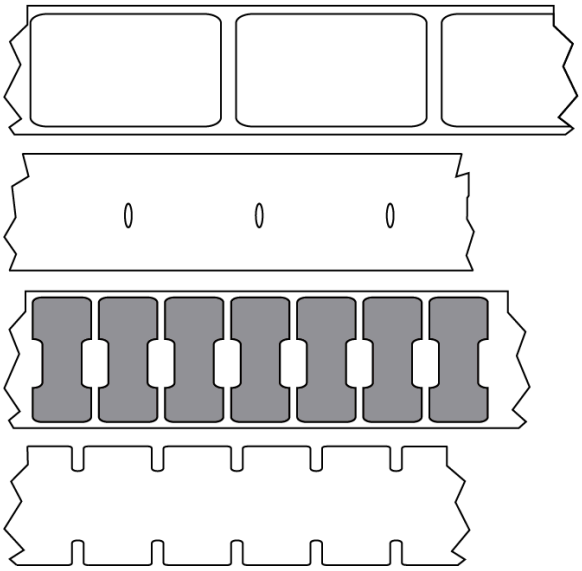

Contrast this with black mark media on page 221 or continuous media on page 222.

## ips (inches-per-second)

The speed at which the label or tag is printed. Many Zebra printers can print from 1 ips to 14 ips.

## label

An adhesive-backed piece of paper, plastic, or other material on which information is printed. A non-continuous label has a defined length, as opposed to a continuous label or a receipt which can have a varying length.

## label backing (liner)

The material on which labels are affixed during manufacture and which is discarded or recycled.

## label type

The printer recognizes the following label types.

Continuous

Gap/Notch

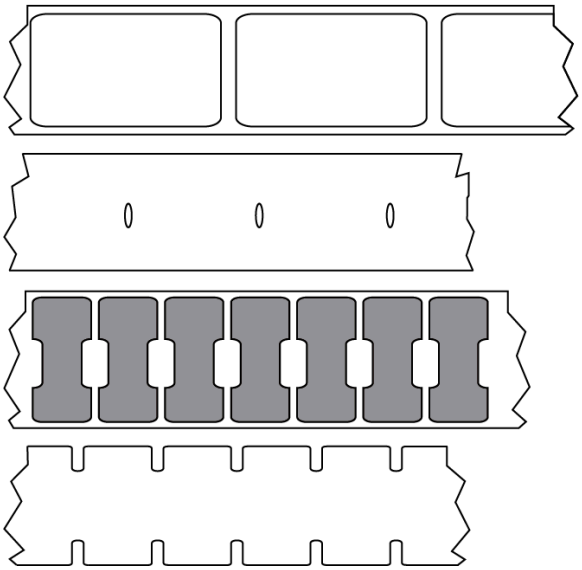

Mark

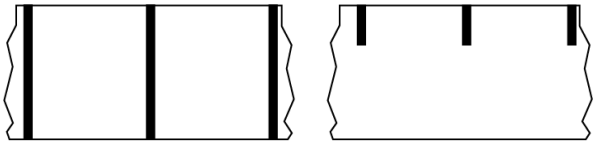

## LCD (liquid crystal display)

A backlit display that provides the user with either operating status during normal operation or option menus when configuring the printer to a specific application.

## LED (light emitting diode)

Indicators of specific printer status conditions. Each LED is either off, on, or blinking depending on the feature being monitored.

## linerless media

Linerless media does not use backing to keep the layers of labels on a roll from sticking to one another. It is wound like a roll of tape, with the sticky side of one layer in contact with the non-sticky surface of the one below it.

Depending on the printer, individual labels may be separated by perforations, or they can be cut apart with a linerless cutter. Because there is no liner, more labels can potentially fit on a roll, cutting down the need to change media as often.

Linerless media is considered an environmentally friendly option because no backing is wasted, and the cost per label can be less than that of standard labels.

Zebra recommends using Zebra ZeroLiner direct thermal linerless media.

## mark media

See black mark media on page 221.

## media

Material onto which data is printed by the printer. Types of media include: tag stock, die-cut labels, continuous labels (with and without media liner), non-continuous media, fanfold media, and roll media.

## media sensor

This sensor is located behind the printhead to detect the presence of media and, for non-continuous media, the position of the web, hole, or notch used to indicate the start of each label.

## media supply hangar

The stationary arm that supports the media roll.

## non-continuous media

Media that contains an indication of where one label/printed format ends and the next one begins. Types of non-continuous media include gap-notch media and black mark media. (Contrast this with continuous media.)

Non-continuous roll media usually comes in the form of labels with an adhesive backing on a liner. Tags (or tickets) are separated by perforations.

Individual labels or tags are tracked and position-controlled using one of these methods:

- Web media separates labels by gaps, holes, or notches.

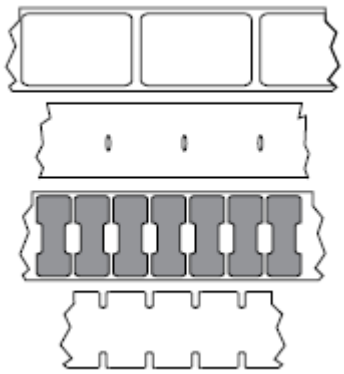

- Black mark media uses pre-printed black marks on the back side of the media to indicate label separations.

- Perforated media has holes—to allow the labels or tags to be separated from each other easily—along with position-control marks, notches, or label gaps.

## non-volatile memory

Electronic memory that retains data even when the power to the printer is turned off.

## notched media

A type of tag stock containing a cutout area that can be sensed as a start-of-label indicator by the printer. This is typically a heavier, cardboard-like material that is either cut or torn away from the next tag. See gap/notch media on page 224.

## peel-off mode

A mode of operation in which the printer peels a printed label away from the backing and allows the user to remove it before another label is printed. Printing pauses until the label is removed.

## perforated media

Media with perforations that allow the labels or tags to be separated from each other easily. The media may also have black marks or other separations between labels or tags.

## print speed

The speed at which printing occurs. For thermal transfer printers, this speed is expressed in terms of inches per second (ips).

## print type

The print type specifies whether the type of media being used requires ribbon to print. Thermal transfer media requires ribbon while direct thermal media does not.

## printhead wear

## Radio frequency identification (RFID) "smart" media

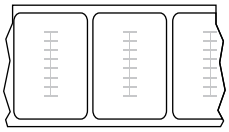

Each RFID label has an RFID transponder (sometimes called an "inlay"), made of a chip and an antenna, embedded between the label and the liner. The shape of the transponder varies by manufacturer and is visible through the label. All "smart" labels have memory that can be read, and many have memory that can be encoded.

RFID media can be used in a printer that is equipped with an RFID reader/encoder. RFID labels are made from the same materials and adhesives as non-RFID labels.

## receipt

A receipt is a variable length printout. One example of a receipt is in retail stores, where each purchased item occupies a separate line on the printout. Therefore, the more items purchased, the longer the receipt.

## registration

Alignment of printing with respect to the top (vertical) or sides (horizontal) of a label or tag.

## ribbon

Ribbon is a thin film that is coated on one side with wax, resin, or wax resin (usually called ink), which is transferred to the media during the thermal transfer process. Ink is transferred onto the media when heated by the small elements within the printhead.

Ribbon is only used with the thermal transfer print method. Direct thermal media does not use ribbon. When ribbon is used, it must be as wide as or wider than the media being used. If the ribbon is narrower than the media, areas of the printhead are unprotected and subject to premature wear. Zebra ribbons have a coating on the back that protects the printhead from wear.

## ribbon wrinkle

A wrinkling of the ribbon caused by improper alignment or improper printhead pressure. This wrinkle can cause voids in the print and/or the used ribbon to rewind unevenly. This condition should be corrected by performing adjustment procedures.

## roll media

Media that comes supplied rolled onto a core (usually cardboard). It can be continuous (no separations between labels)

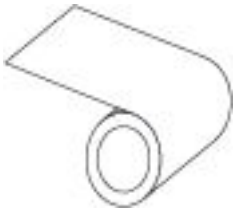

or non-continuous (some type of separation between labels).

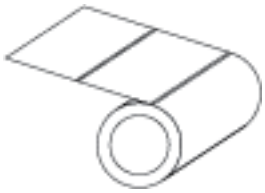

Contrast this with fanfold media on page 223.

## supplies

A general term for media and ribbon.

## symbology

The term generally used when referring to a barcode.

## tag stock

A type of media having no adhesive backing but featuring a hole or notch by which the tag can be hung on something. Tags are usually made of cardboard or other durable material and are typically perforated between tags. Tag stock can come on rolls or in a fanfold stack. (See gap/notch media on page 224.)

## tear-off mode

A mode of operation in which the user tears the label or tag stock away from the remaining media by hand.

## thermal transfer

A printing method in which the printhead presses an ink or resin coated ribbon against the media. Heating the printhead elements causes the ink or resin to transfer onto the media. By selectively heating the printhead elements as the media and ribbon move past, an image is printed onto the media.

Contrast this with direct thermal on page 222.

## void

A space on which printing should have occurred, but did not due to an error condition such as wrinkled ribbon or faulty print elements. A void can cause a printed barcode symbol to be read incorrectly or not at all.