LCD KVM Switch

User Manual

Models 507622, 507738, 507745, 507769, 507776, 507844, 507882, 507899, 507905, 507912, 507936

Model Shown: 507622

INTELLINET®
NETWORK SOLUTIONS

INT-LCD-KVM-SWITCH_UM-0317_REV5.01

LCD KVM Switch User Manual

Compliance Statements

U.S. Federal Communications Commission (FCC) Interference Statement

This product has been tested and found to comply with FCC regulations Class B (Class B) digital device and FCC specifications Details of Section 15. These limits are designed to provide reasonable protection against harmful interference in a residential installation. This equipment generates, uses and can radiate radio frequency energy, and if not installed and used in accordance with the instructions may cause harmful interference to radio communications. However, there is no guarantee that interference will not occur in a particular installation. If this equipment does cause harmful interference to radio or television reception, which can be determined by turning the equipment off and on, the user is encouraged to try to correct the interference by one or more of the following measures: reorient or relocate the receiving antenna; increase the separation between the equipment and the receiver; connect the equipment to an outlet on a circuit different from the receiver; or consult the dealer or an experienced radio/TV technician for help.

CE / R&TTE

English: This device complies with the requirements of R&TTE Directive 1999/5/EC. The Declaration of Conformity is available at:
Deutsch: Dieses Gerät enspricht der Direktive R&TTE Direktive 1999/5/EC. Die Konformitätserklärung für dieses Produkt finden Sie unter:
Español: Este dispositivo cumple con los requerimientos de la Directiva R&TTE 1999/5/EC. La declaración de conformidad esta disponible en:
Français: Cet appareil satisfait aux exigences de la directive R&TTE 1999/5/CE. La Déclaration de Conformité est disponible à:
Polski: Urządzenie spełnia wymagania dyrektywy R&TTE 1999/5/EC. Deklaracja zgodności dostępna jest na stronie internetowej producenta:
Italiano: Questo dispositivo è conforme alla Direttiva 1999/5/EC R&TTE. La dichiarazione di conformità è disponibile al:

intellinetnetworks.com

Waste Electrical & Electronic Equipment

Disposal of Electronic Equipment (applicable in the E.U. and countries with separate collection systems)

English: This symbol on the product or its packaging indicates that this product shall not be treated as household waste. Instead, it should be taken to an applicable collection point for the recycling of electrical and electronic equipment. By ensuring this product is disposed of correctly, you will help prevent potential negative consequences to the environment and human health, which could otherwise be caused by inappropriate waste handling of this product. If your equipment contains easily removable batteries or accumulators, dispose of these separately according to your local requirements. The recycling of materials will help to conserve natural resources. For detailed information about recycling this product, contact your local city office, your household waste disposal service or the shop where you purchased this product. In countries outside of the EU: If you wish to discard this product, contact your local authorities and ask for the correct manner of disposal.
Deutsch: Dieses auf dem Produkt oder der Verpackung angebrachte Symbol zeigt an, dass dieses Produkt nicht mit dem Hausmüll entsorgtwerden darf. In Übereinstimmung mit der Richtlinie 2002/96/EG des Europäischen Parlaments und des Rates über Elektro- und Elektronik-Altgeräte (WEEE) darf dieses Elektrogerät nicht im normalen Hausmüll oder dem Gelben Sack entsorgt werden. Wenn Sie dieses Produkt entsorgen möchten, bringen Sie es bitte zur Verkaufsstelle zurück oder zum Recycling-Sammelpunkt Ihrer Gemeinde.
Español: Este símbolo en el producto o su embalaje indica que el producto no debe tratarse como residuo doméstico. De conformidad con la Directiva 2002/96/CE de la UE sobre residuos de aparatos eléctricos y electrónicos (RAEE), este producto eléctrico no puede desecharse se con el resto de residuos no clasificados. Deshágase de este producto devolviéndolo a su punto de venta o a un punto de recolección municipal para su reciclaje.
Français: Ce symbole sur le produit ou son emballage signifie que ce produit ne doit pas être traité comme un déchet ménager. Conformément à la Directive 2002/96/EC sur les déchets d'équipements électriques et électroniques (DEEE), ce produit électrique ne doit en aucun cas être mis au rebut sous forme de déchet municipal non trié. Veuillez vous débarrasser de ce produit en le renvoyant à son point de vente ou au point de ramassage local dans votre municipalité, à des fins de recyclage.
Italiano: Questo simbolo sui prodotto o sulla relativa confezione indica che il prodotto non va trattato come un rifiuto domestico. In ottemperanza alla Direttiva UE 2002/96/EC sui rifiuti di apparecchiature elettriche ed elettroniche (RAEE), questa prodotto elettrico non deve essere smaltito come rifiuto municipale misto. Si prega di smaltire il prodotto riportandolo al punto vendita o al punto di raccolta municipale locale per un opportuno riciclaggio.
Polski: Jeśli na produkcie lub jego opakowaniu umieszczono ten symbol, wówczas w czasie utylizacji nie wolno wyrzucać tego produktu wraz z odpadami komunalnymi. Zgodnie z Dyrektywą Nr 2002/96/WE w sprawie zużytego sprzętu elektrycznego i elektronicznego (WEEE), niniejszego produktu elektrycznego nie wolno usuwać jako nie posortowanego odpadu komunalnego. Prosimy o usuniecie niniejszego produktu poprzez jego zwrot do punktu zakupu lub oddanie do miejscowego komunalnego punktu zbiórki odpadów przeznaczonych do recyklingu.

Table of Contents

COMPLIANCE STATEMENTS 2
PRODUCT MODELS & DESCRIPTIONS 4
PACKAGE CONTENTS & MANUAL INFORMATION 4
A NOTE TO THE USER 4
DESCRIPTION OF SYMBOLS 4

CHAPTER 1 - INTRODUCTION 5
1.1 PRODUCTS OVERVIEW 5
1.1.1 Hardware Requirements 5
1.1.2 Supported Operating Systems 6
1.2 PARTS 7
1.2.1 Front View 7
1.2.2 Modular Switch Rear Views 8
1.3 VIEWS AND DIMENSIONS 9

CHAPTER 2 - HARDWARE INSTALLATION 10
2.1 STACKING AND INSTALLATION NOTES 10
2.2 STANDARD RACK MOUNTING 10
2.3 KVM MODULE ASSEMBLY & DISASSEMBLY 11
2.4 KEYBOARD DISASSEMBLY 12
2.5 EXPANSION MODULE INSTALLATION 12
2.6 SINGLE DEVICE INSTALLATION 14
2.6.1 VGA Port KVM Module Installation 14
2.6.2 Cat5 Port KVM Module Installation 15
2.6.3 DVI Port KVM Module Installation 16
2.7 CASCADE DEVICE INSTALLATION 17
2.7.1 VGA Port LCD KVM Switch Cascade 17
2.7.2 Cat5 Port LCD KVM Switch Cascade 18

CHAPTER 3 - BASIC OPERATIONS 19
3.1 HOT-SWAP 19
Hot-Swap Console Port 19
3.2 CONNECTION PORT SELECTION 19
3.2.1 Manual Switching: 19
3.2.2 OSD Menu Screen Selection 19
3.2.3 Hot Key Selection 20
3.3 POWER OFF AND RESTART 20
3.4 OPENING / CLOSING / LOCKING THE LCD 20

CHAPTER 4 - ON-SCREEN DISPLAY (OSD) OPERATIONS 21
4.1 OSD LOGIN 21
4.2 OSD HOT KEY 21
4.3 OSD MAIN MENU 21
4.4 OSD MAIN SCREEN HEADINGS 21
4.5 OSD FUNCTIONS 21
4.5.1 F1:GOTO 22
4.5.2 F2:SCAN 22
4.5.3 F3:LIST 22
4.5.4 F4 QV 23
4.5.5 F5 EDIT 23
4.5.6 F6:SET 23

APPENDIX 27
A-1 GENERAL SAFETY INSTRUCTIONS 27
A-2 CABINET INSTALLATION 27
A-3 SPECIFICATIONS 28
A.3.1 VGA Series LCD KVM Switch 28
A.3.2 Cat5 Series LCD KVM Switch 29
A.3.3 DVI Series LCD KVM Switch 30
A.3.4 LCD Module Specifications 31

WARRANTY 32

NOTES 33

Product Models & Descriptions

Model	Name	Description
507622	Rackmount 17" LCD Console	17-Inch LCD Panel, 1U, Modular System
507738	Rackmount 19" LCD Console	19-Inch LCD Panel, 1U, Modular system
507745	Rackmount 19" LCD Console DVI	19-Inch LCD Panel, 1U, DVI, Modular system
507769	VGA 1-Port Cable for KVM Console	PS2, USB and VGA Connectors
507776	Modular 8-Port VGA KVM Switch	For Use with Intellinet Product Numbers 507622 or 507738
507844	Modular 16-Port VGA KVM Switch	For Use with Intellinet Product Numbers 507622 or 507738
507822	Modular 8-Port CAT5 VGA KVM Switch	For Use with Intellinet Product Numbers 507622 or 507738
507899	Modular 16-Port CAT5 VGA KVM Switch	For Use with Intellinet Product Numbers 507622 or 507738
507905	DVI 1-Port Cable for KVM Console	PS2, USB and VGA Connectors
507912	Modular 8-Port DVI KVM Switch	For Use with Intellinet Product Number 507745
507936	IP-Function Module for KVM Switches	For Use with Intellinet Modular KVM Console/Switch Range

Package Contents & Manual Information

Name	Quantity/Unit	Description
LCD KVM Console	1 pc.	LCD Computer
KVM Cables	N pc.	Cable qts. vary based on product descr.
Power Supply	1 pc.	Built-in power supply
Power Cable	1 pc.	Standard 1.8 m (5.9 ft.) power cord
Instructions	1 pc.	Paper manual
Mounting Brackets	2 pcs.	LCD KVM single-mount bracket
Lock ear	2 pcs.	Fixing rear panel
Screw-Install Kit	1 pc.	Screw-in mounting bracket

- Ensure that all parts are present and free from damage. If parts are missing or damaged, contact your Intellinet dealer or distributor.
- Make sure to read this manual carefully before installing and operating the Intellinet LCD KVM Switch. Only professionals should install this product.

A Note to the User

From time to time, Intellinet may modify and/or alter the information, documentation and specifications contained in this manual, with or without prior notice. If the software needs to be updated after purchase, the user and/or her or his dealer/distributor will be responsible for all necessary service and repair. The user is responsible for correcting any radio or television interference that this equipment may cause. Make sure to set the voltage correctly before use. Intellinet will not be liable for any damage resulting from incorrect selection of operating voltage.

A typical Liquid Crystal Display (LCD) has millions of pixels. A defective pixel is one that is off or does not display the correct color, which may develop if the screen absorbs a slight impact during transportation or even in the process of manufacturing. It is normal for a product with an LCD screen to arrive to the consumer with a few of these defects. The user should contact her or his dealer/distributor in the event that there is more damage than described here.

Description of Symbols

- **[ ]** Brackets around a word indicate that the user must complete a keyboard action based on the text in the brackets. For example, [Enter] indicates that the user needs to press the "Enter" key. When more than one key needs to be pressed at the same time, the manual denotes this command by joining a plus sign between the two keys (e.g., [Ctrl+Alt]).
- **1.** Numbers indicate the operating steps that are necessary to complete a function.
- ✚ indicates that the information is for the user's reference but is not essential to the procedure.
- ✪ The star-in-the-circle symbol indicates that the information is very important.

Chapter 1 – Introduction

1.1 Products Overview

1.1.1 Hardware Requirements

1.1.1.1 Console

- Rear two USB-A keyboard and mouse ports
- Pre-set USB-A type keyboard and mouse
- A set of USB interface mice
- A set of USB interface keyboards
- Single-ended extension cable (optional)
- IP remote control terminal 1000M network interface (optional installation)

1.1.1.2 Computer

The following devices must be installed on each computer:

- A VGA or DVI video display card
- USB-A connection port
- PS2 / PS2 keyboard, mouse ports

1.1.1.3 Cables

KVM equipment provides **five** kinds of connection cables according to the user's product:

- LCD KVM switch single-port DVI cable

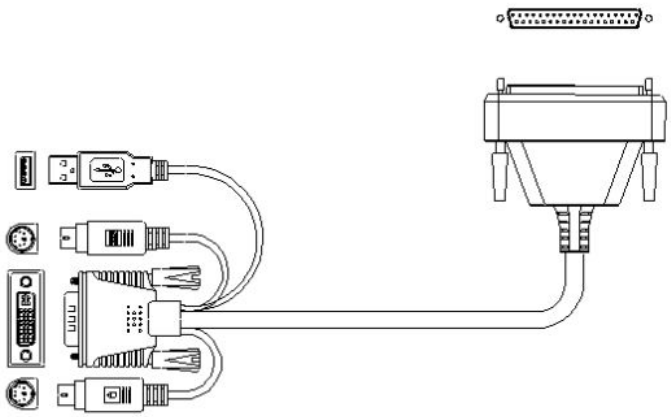

Computer-side DVI-I & USB (Type-A) + PS2 keyboard (purple) + PS2 mouse (green) to Parallel (DB37P)

- LCD KVM switch single port VGA cable

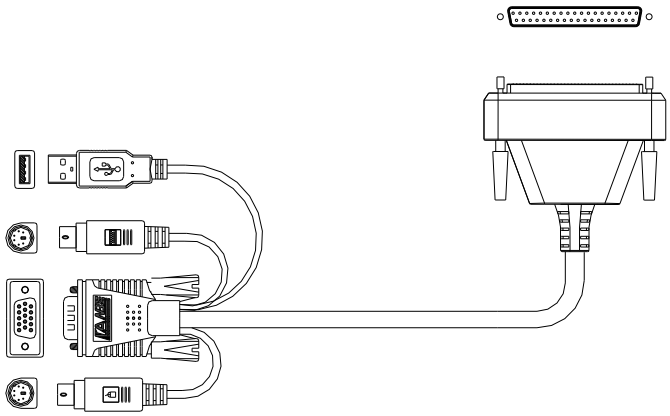

Computer-side VGA & USB (Type-A) + PS2 keyboard (purple) + PS2 mouse (green) to Parallel

- LCD KVM switch VGA cable

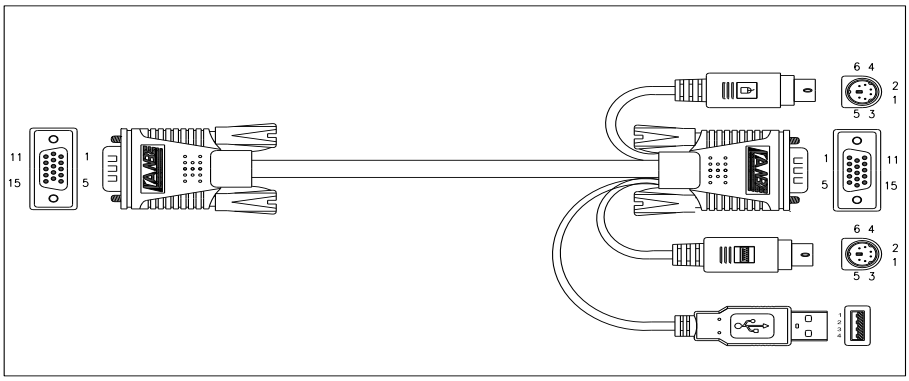

VGA & USB (Type-A) + PS2 keyboard (purple) + PS2 mouse (green) to VGA

- LCD KVM switch DVI cable

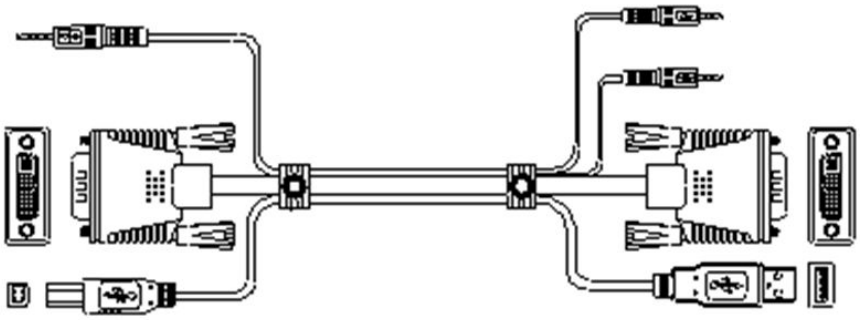

DVI-I & USB (Type-A) + Audio

- Cat5 to VGA connection Dongle

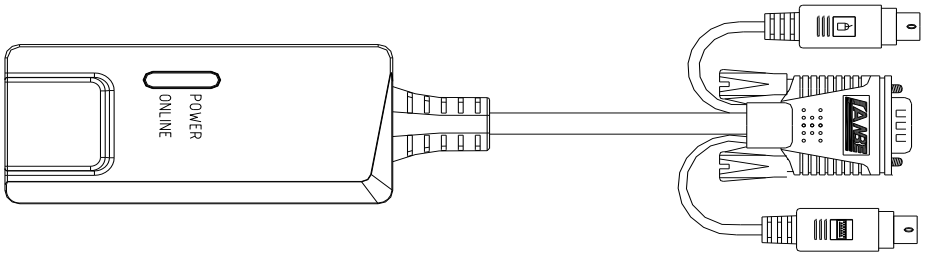

VGA + PS2 keyboard (purple) + PS2 mouse (green) to Cat5 port

1.1.2 Supported Operating Systems

System		Version
Windows		Windows 2000/XP/2003/2008/Vista/7/10
Linux	Red Hat	9.0 or higher, Fedora and above, RHEL AS 4, RHEL 5
	SuSE	10/11.1, Open SUSE 10.2; SLES 10 SP1
	Debian	3.1 / 4.0
	Ubuntu	7.04/7.10
UNIX	AIX	4.3 or higher
	FreeBSD	5.5 or higher
	Sun Solaris	8 or higher
Mac		OS 9.0 to 10.6
Novell	Netware	6.0 or higher
DOS		6.2 or later

1.2 Parts

1.2.1 Front View

The are two different sizes of LCD screens, as shown below. Refer to the chart for a description of the numeric values for each graphic.

17" Model

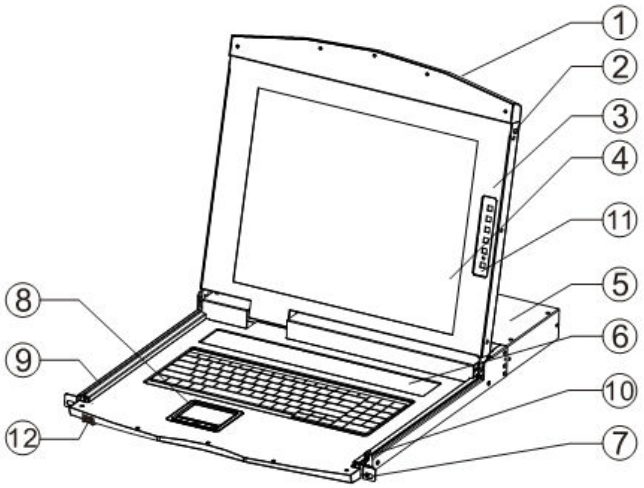

19" Model

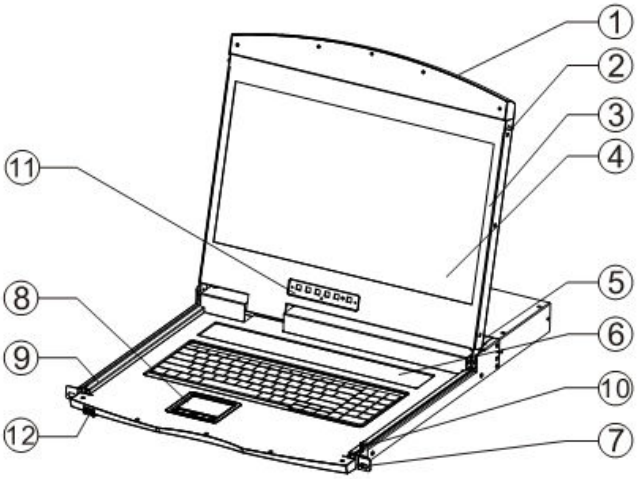

Number	Part	Function Description
1	Upper Handle	Pull the handle, slide the LCD module out and push it in
2	Lock	Locks the LCD module; pull out module first, then push into the automatic lock
3	LCD Screen Cover	Opens or closes with the handle; opening and closing angle of 0° – 100°
4	LED Screen	17" or 19" LED/LCD screen – Later referred to as On Screen Displa (OSD)
5	KVM Module	KVM modules can be easily removed and replaced
6	KVM Key Panel	Press this key to enter to manual switch function
7	Front Mount Brackets	For installation into cabinets and racks with screws
8	Touch Mouse Pad	KVM console mouse; can control the computer's operations
9	Slide Rails	LCD module sliding track
10	Keyhole	Corresponds to the latch of the LCD module
11	LCD Keypad Panel	Used to control the LED screen display adjustment and switch
12	Front USB Port	Used to access an external USB keyboard or mouse

1.2.2 Modular Switch Rear Views

This section shows the available connection types of the Intellinet Removable KVM Switch Modules. Both the VGA and Cat5 switch types can be optionally configured with Remote Control IP as the images describe.

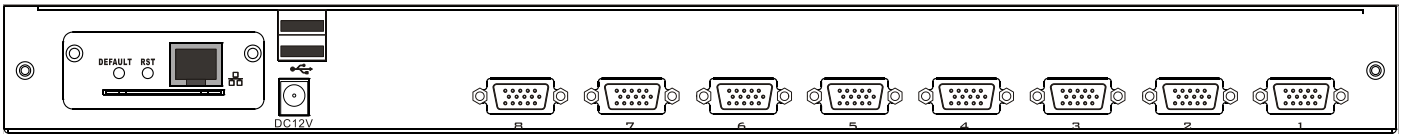

LCD KVM 8-port VGA Switch

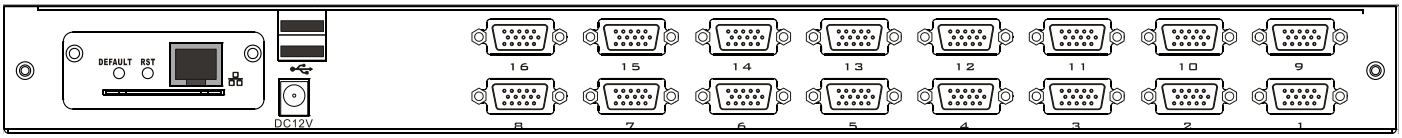

LCD KVM 16-port VGA Switch

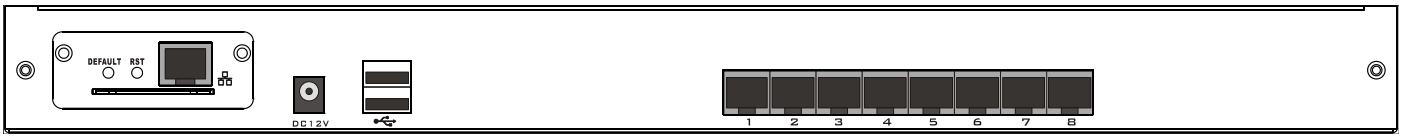

LCD KVM 8-port Cat5 Switch

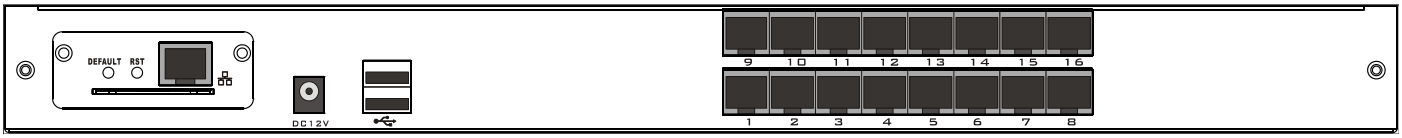

LCD KVM 16-port Cat5 Switch

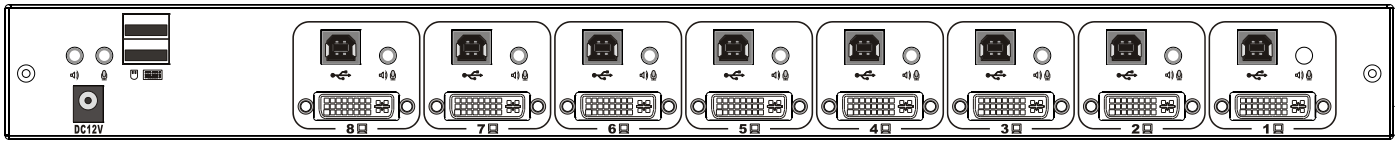

LCD KVM 8 port DVI Switch

1.3 Views and Dimensions

4:3 Screen – 17"

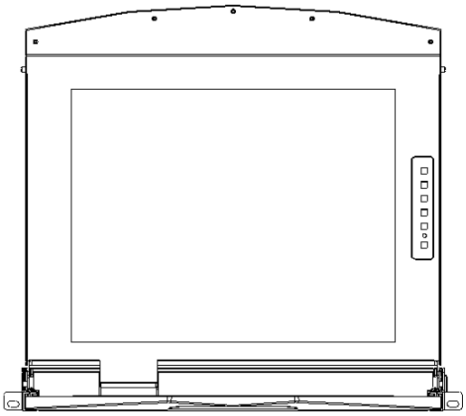

16:9 Screen – 19"

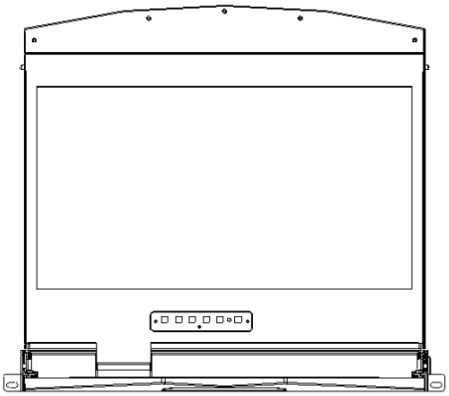

Single-Rail LCD KVM Console

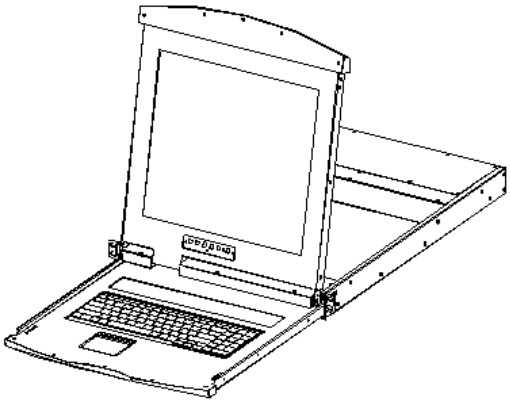

Single–Rail Multi-Port KVM Console Dimensions

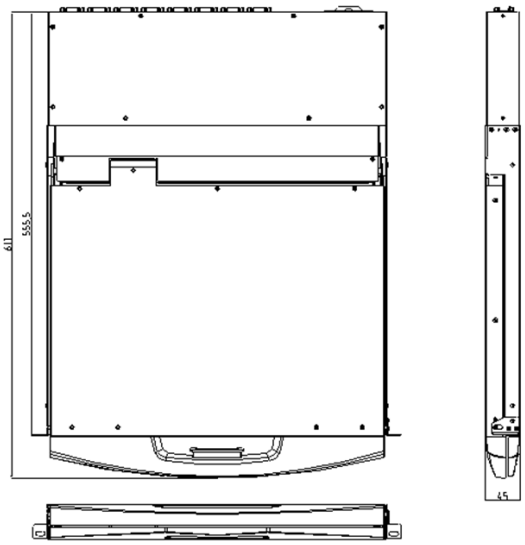

Chapter 2 – Hardware Installation

2.1 Stacking and Installation Notes

1. Before proceeding, refer to the important safety information regarding the placement of the LCD KVM switch, which is listed in the appendix.

2. Before installation, make sure that all the devices connected to the power supply are turned off. Unplug all power cables from the computer.

3. The LCD KVM switch is packed with stuffing to protect it during transportation and movement. Make sure the equipment is free from all protective films and fillers before mounting.

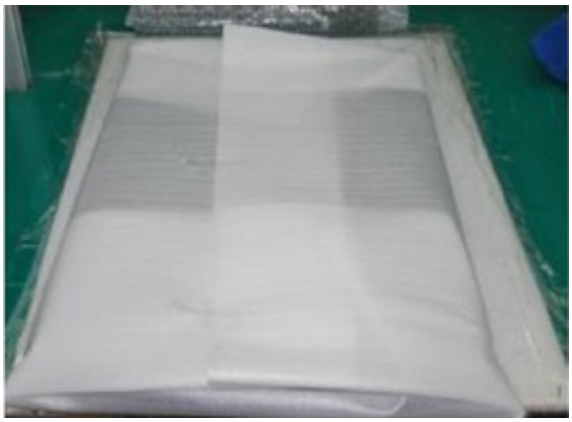

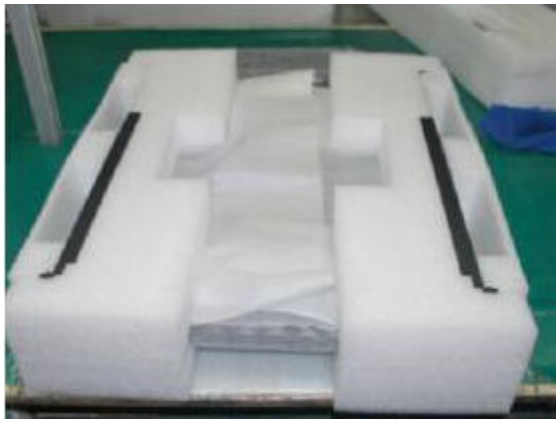

Place the LCD KVM switch in a suitable area that will sufficiently and securely support the weight of the equipment plus additional cables. Make sure that the area is clean and free from other debris that can affect the ventilation and normal operation of the switch.

2.2 Standard Rack Mounting

1. Remove the mounting brackets and fasten the front bezel to the frame with screws. Slide the back plate with the rear flange toward the rack until the flange is against the chassis. Then use the screws to secure the rear flange to the chassis.
2. Slide the LCD KVM unit onto the support flange. Secure the front of the switch to the front of the rack with the screws provided in the package.
3. Slide the rear-connecting slide bracket along the side rails until it reaches the rear of the switch.

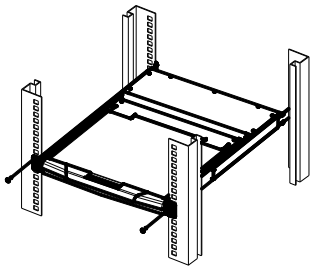

4. Use the screws provided in this package to secure the strip to the rear of the switch.

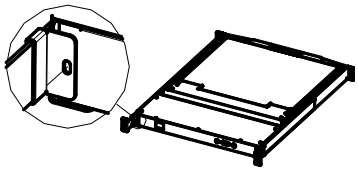

2.3 KVM Module Assembly & Disassembly

The Intellinet series of KVM Switches utilizes an LCD screen, keyboard and mouse with detachable, modular switch components. This design allows the user to change out any the KVM components in the case of damage or if the set-up of the system changes.

Refer to the following figure for loading and unloading procedures:

1. Once the series of products is placed on the appropriate operating platform, have a screwdriver ready to remove and replace screws.

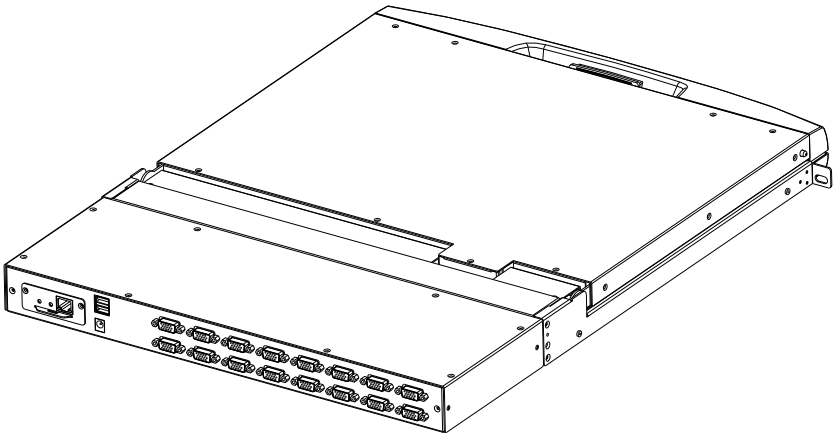

2. Remove the KVM assembly and the captive screws on the side brackets as shown to separate the KVM assembly from the front LCD assembly.

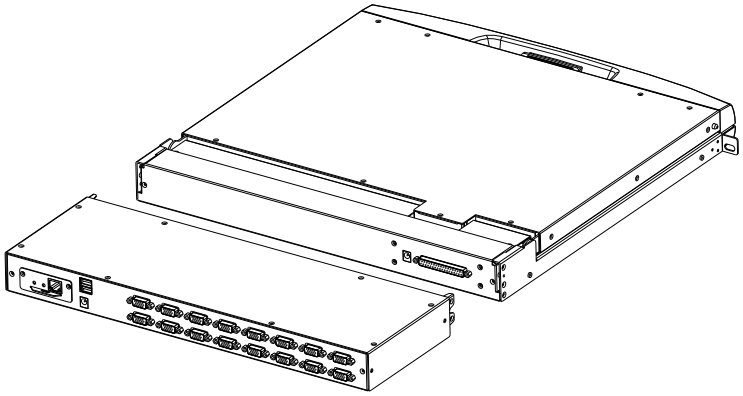

3. Note the connector between the KVM module and the LCD during removal and installation. Otherwise, damage to the connection may occur with failures between the interface and equipment.

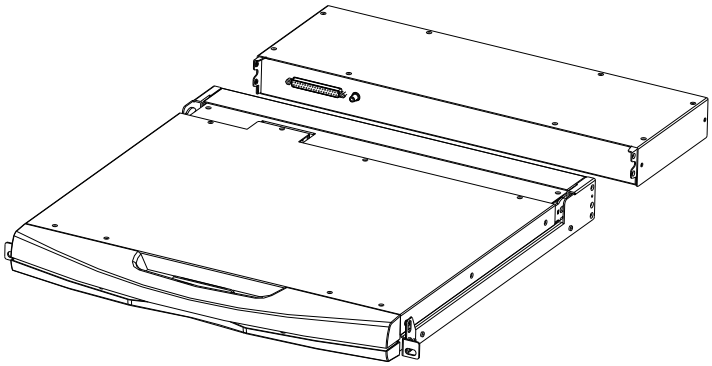

2.4 Keyboard Disassembly

The following diagram demonstrates how to replace or repair the keyboard portion of the KVM switch.

1. Have the LCD KVM firmly fixed in the rack and the LCD panel open to reveal the keyboard and mouse operating surface.

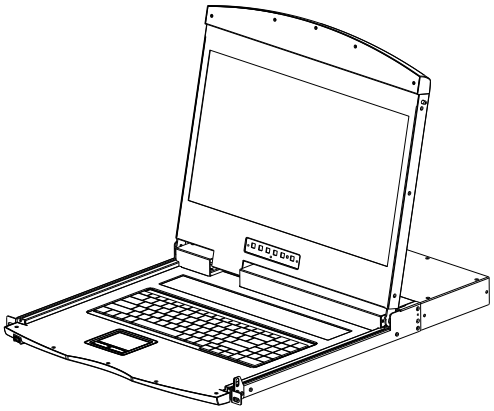

2. Feel for the circular opening on the bottom of the keyboard panel and push the keyboard gently from its slot. Find the connection side of the USB plug and detach it to remove the keyboard. NOTE: When replacing the module, first plug in the keyboard USB connector, and then replace the keyboard itself into the slot.

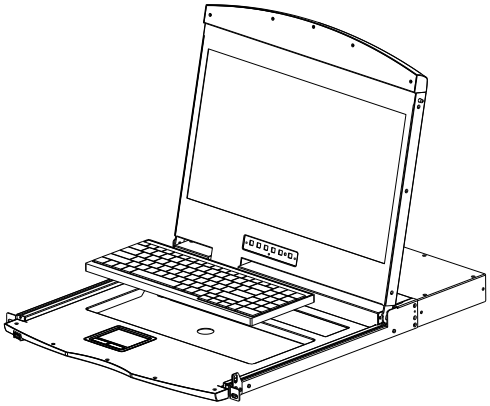

2.5 Expansion Module Installation

To quickly and easily upgrade this equipment for remote control of the KVM Switch and its attached devices, use an Intellinet IP-Function Module for KVM Switches (507936). Follow these steps to complete installation. **NOTE: make sure that the switch is off and disconnected from a power source before beginning installation.**

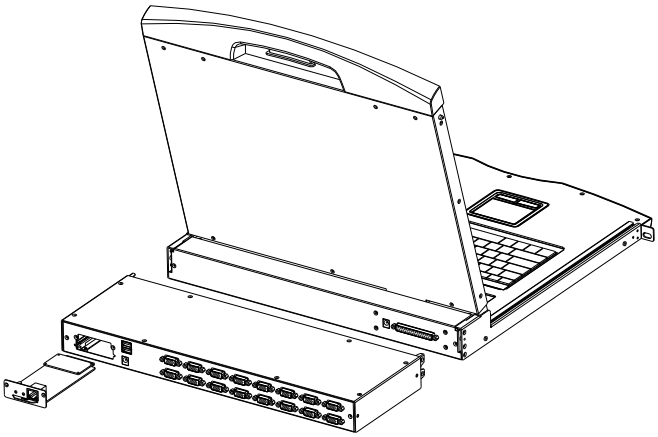

1. On the rear of the KVM module, find the expansion slot and the blank panel for installation. Use a screwdriver to remove the screws and the blanking panel.

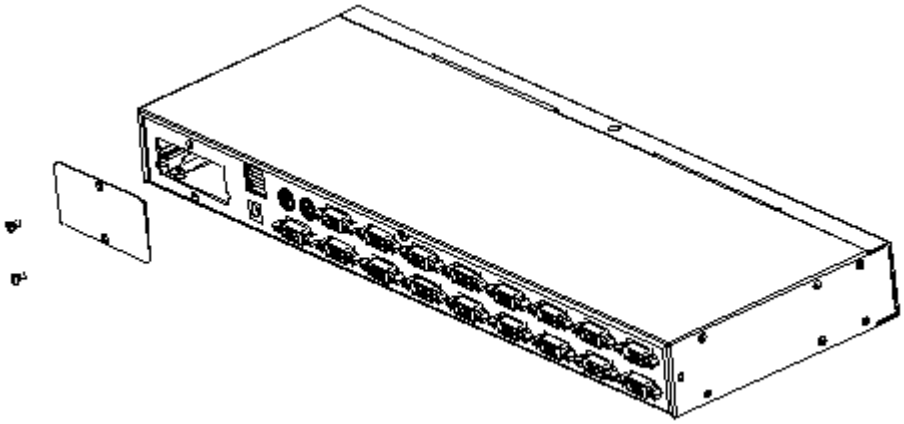

2. Push the IP module gently into the cavity.

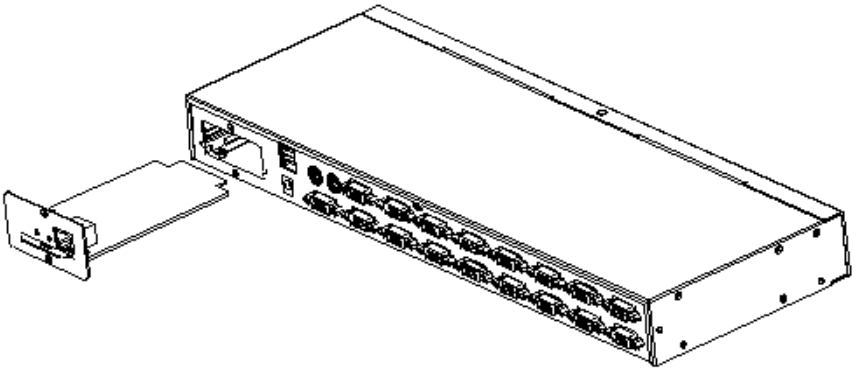

3. Fix the module in place with the screws.

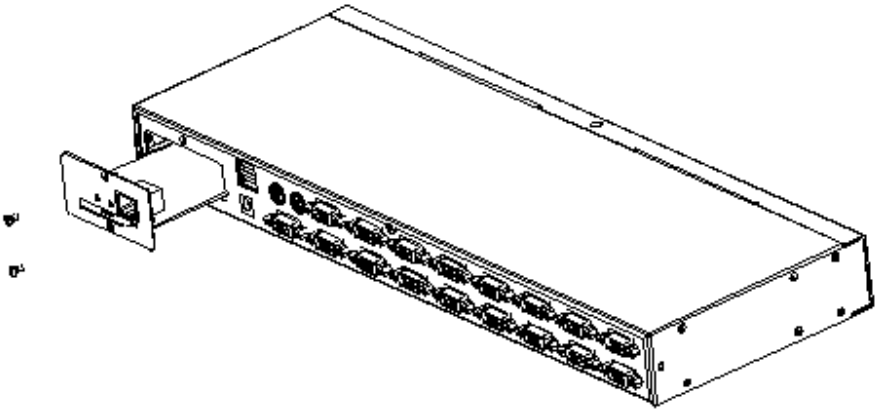

4. Turn on the KVM switch and follow the IP module instructions to complete setup of the IP module.

2.6 Single Device Installation

The follow section describes how to correctly establish VGA, Cat5 or DVI connections. **Note: Before installation, make sure that the equipment is powered off. To prevent damage to the equipment during installation, make sure that all installed devices are fully grounded.**

2.6.1 VGA Port KVM Module Installation

To install a single-level KVM, complete the following steps. Refer to the diagram below for additional visualization:

1. Plug your USB keyboard and mouse into the USB console port on the back panel of the switch.
2. Using a set of KVM cables that correspond to the model, plug the VGA connector into any available VGA port on the switch.
3. Plug the corresponding VGA video connector, USB or PS2 connector of the KVM cable into the corresponding port on the PC.
4. Connect the supplied power cable from the power jack on the switch to an AC power source.
5. Connect the network cable to the IP port of the IP module.
6. Turn on the computer.

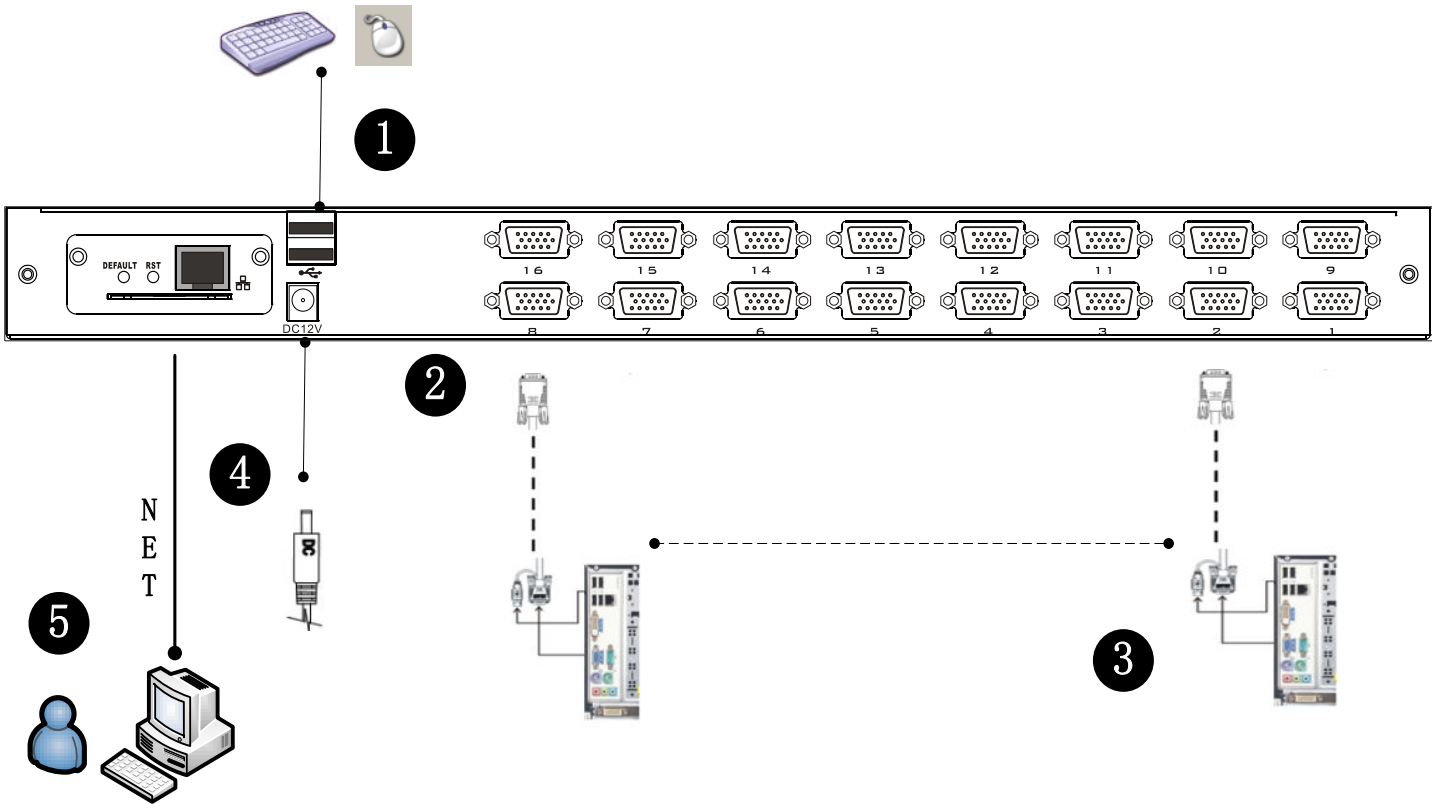

Notes:

1. Make sure that all plugs are connected to the same group of KVM connection port jacks (all connected to Port1 or all connected to Port2).
2. The IP module is an optional configuration of the product. If the product you purchased does not contain the module, ignore the related operation in Step 5.
3. Before using the IP module, make the appropriate configuration and complete a network debugging after accessing the network you want to connect to. Refer to the IP module product manual for how to use and debug the IP module.

2.6.2 Cat5 Port KVM Module Installation

To install a single-level KVM, complete the following steps. Refer to the diagram below for additional visualization:

1. Plug your USB keyboard and mouse into the USB console port on the back panel of the switch.
2. Use a set of Cat5e / 6-wire connectors to plug into any available Cat5 port on the switch.
3. Plug a Cat5e / 6-wire connector into the Cat5 connector on the dongle module of the KVM. Connect the corresponding VGA video connector, USB or PS2 connector of the dongle cable to the corresponding port on the PC.
4. Connect the supplied power cable from the power jack on the switch to an AC power source.
5. Connect the network cable to the IP port of the IP module.
6. Turn on the computer.

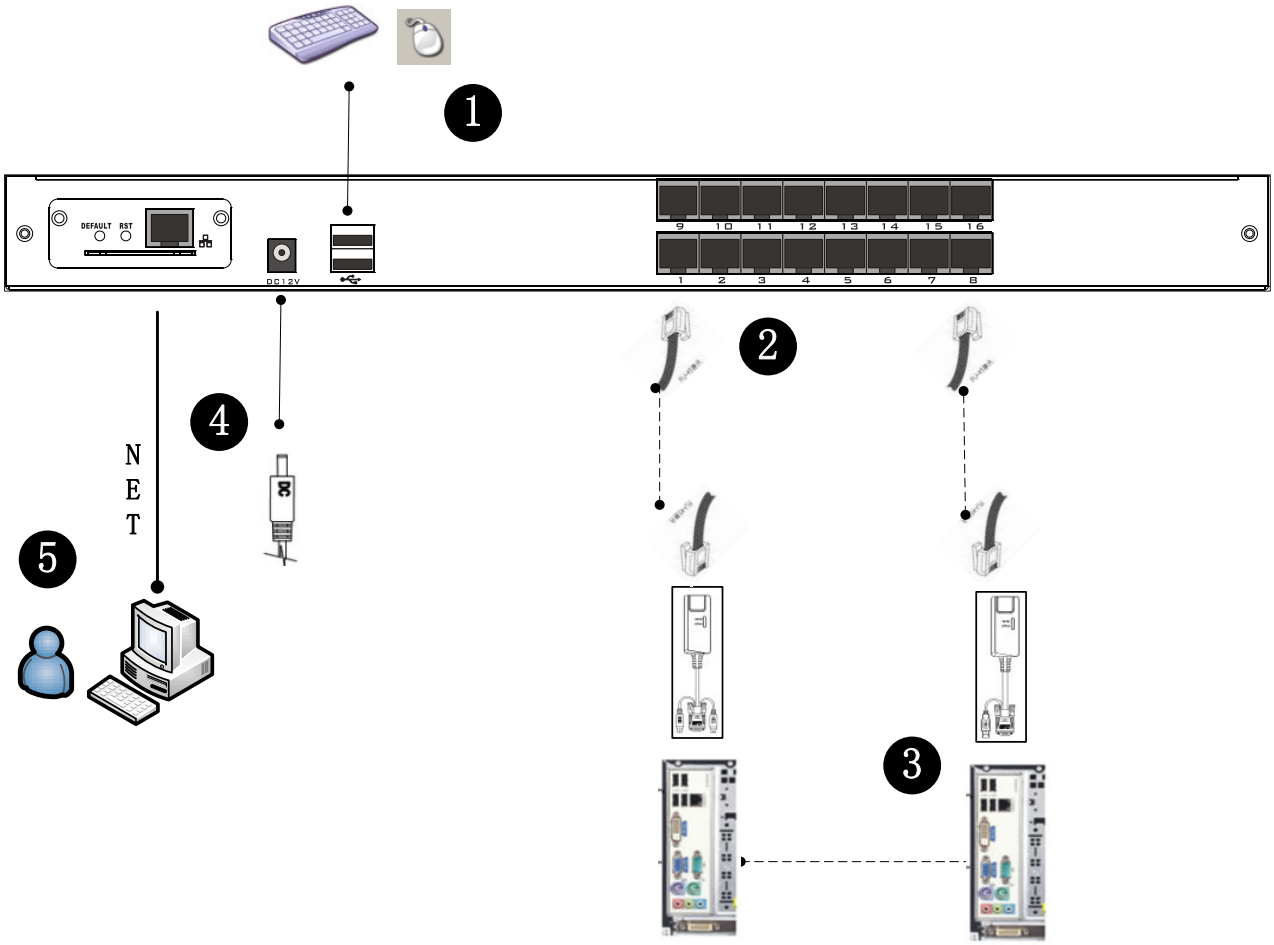

Notes:

1. Make sure that all plugs are connected to the same group of KVM connection port jacks (all connected to Port1 or all connected to Port2).
2. The IP module is an optional configuration of the product. If the product you purchased does not contain the module, ignore the related operation in Step 5.
3. Before using the IP module, make the appropriate configuration and complete a network debugging after accessing the network you want to connect to. Refer to the IP module product manual for how to use and debug the IP module.
4. For display problems caused by transmission distance, electromagnetic interference, common ground, etc., Intellinet recommends using Cat6 shielded network cable to connect and try to improve the display effect.

2.6.3 DVI Port KVM Module Installation

To install a single-level KVM, complete the following steps. Refer to the diagram below for additional visualization:

1. Plug your USB keyboard and mouse into the USB console port on the back panel of the switch.
2. Insert the audio cable plug of the microphone and the speaker into the corresponding port.
3. Using a set of DVI KVM cable connectors that correspond to this module, plug them into the available ports on the switch – DVI to DVI port, USB-B to keyboard port, mouse port, and composite audio plug to the audio jack.
4. Connect the supplied power cable from the power jack on the switch to an AC power source.
5. Connect the network cable to the IP port of the IP module.
6. Turn on the computer.

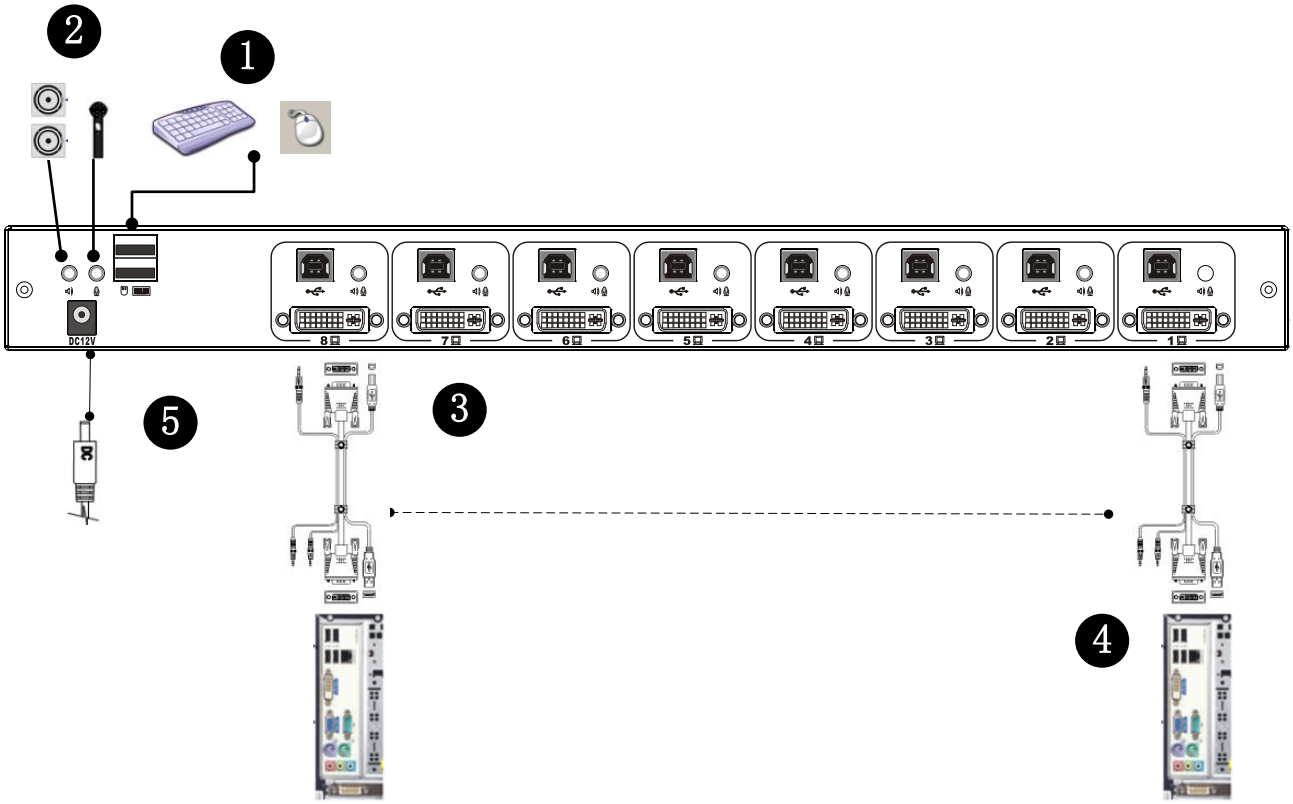

Notes:

1. Make sure that all plugs are connected to the same group of KVM connection port jacks (all connected to Port1 or all connected to Port2).
2. The IP module is an optional configuration of the product. If the product you purchased does not contain the module, ignore the related operation in Step 5.
3. Before using the IP module, make the appropriate configuration and complete a network debugging after accessing the network you want to connect to. Refer to the IP module product manual for how to use and debug the IP module.

2.7 Cascade Device Installation

This product can be cascaded to increase the number of controlled devices.

2.7.1 VGA Port LCD KVM Switch Cascade

In the VGA-switch Cascade Mode, the keyboard, mouse and computer connections are the same with the stand-alone connection. The number part of the description is as follows:

1. A cascaded KVM switch can be connected in two ways—by using a USB KVM cable (as shown in connection number 2 in the figure) or a PS2 KVM cable (as shown in connection number 1 in the figure). Connect to the upper-level switcher.
2. The number of computers connected to each level can be freely increased or decreased according to the user's requirements.
3. Employing the use of the IP module allows for the remote control of the connected devices. This structure can be handed over to the KVM switch from the top of the local and remote groups with unified control and management operations.

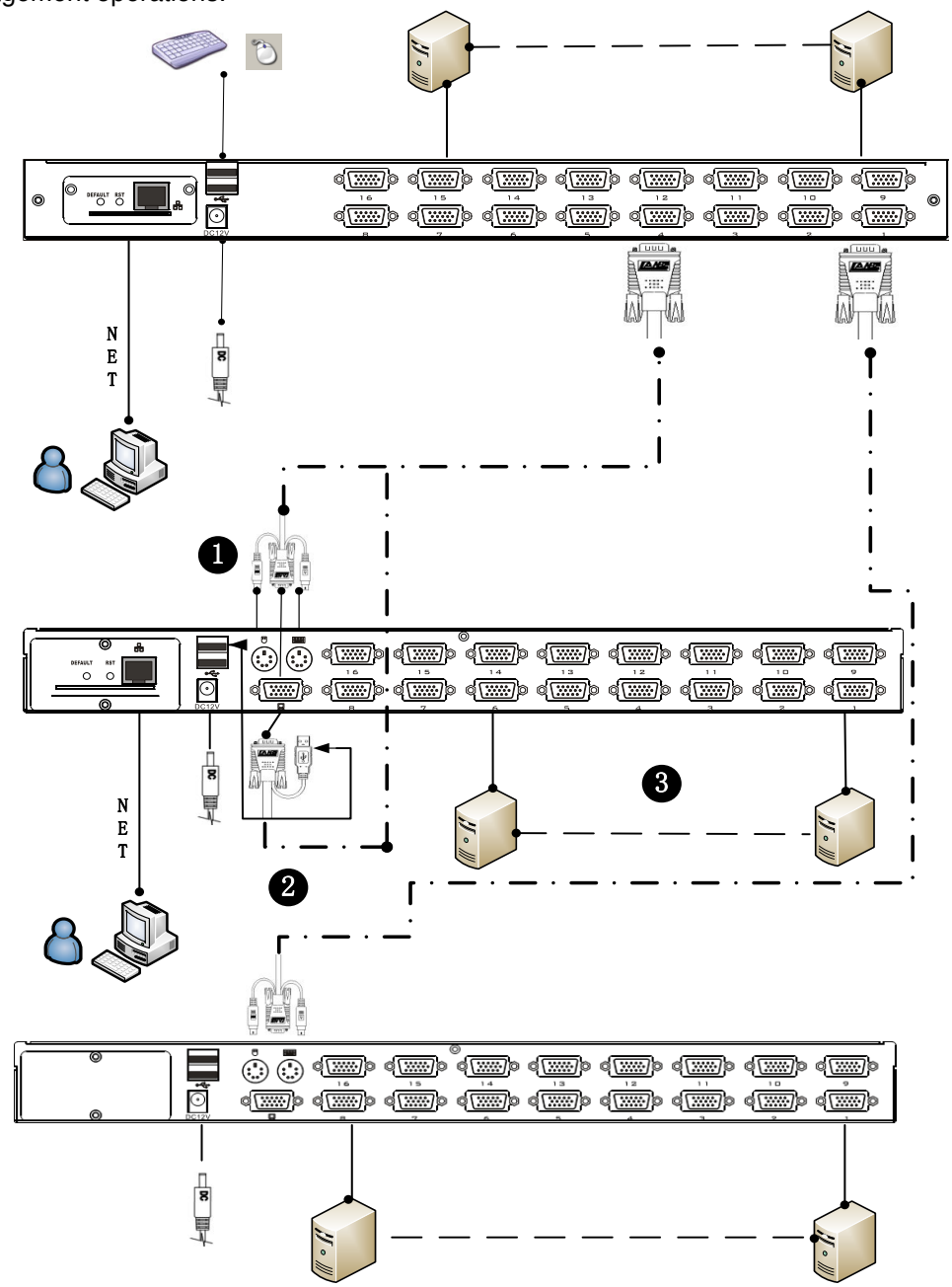

Note: Cascade Mode divides into two levels. Set the switch in the On-Screen Display (OSD) Menu with two levels of Hot Keys for two different Hot Key combinations, or the OSD will not start when cascaded. (Refer to the OSD chapter for details on the OSD Hot Key settings.)

2.7.2 Cat5 Port LCD KVM Switch Cascade

In the Cat5-switch Cascade Mode, the keyboard, mouse and computer connections are the same with the stand-alone connection. The number part of the description is as follows:

1. A cascaded KVM switch can be connected in two ways—by using a USB KVM cable (as shown in connection number 2 in the figure) or a PS2 KVM conversion-module cable and a switch to the next level to connect.
2. Refer to the connection port shown in figure 2, which is the connection port for Remote Control mode through the Remote Control console.
3. Employing the use of the IP module allows for the remote control of the connected devices. This structure can be handed over to the KVM switch from the top of the local and remote groups with unified control and management operations.

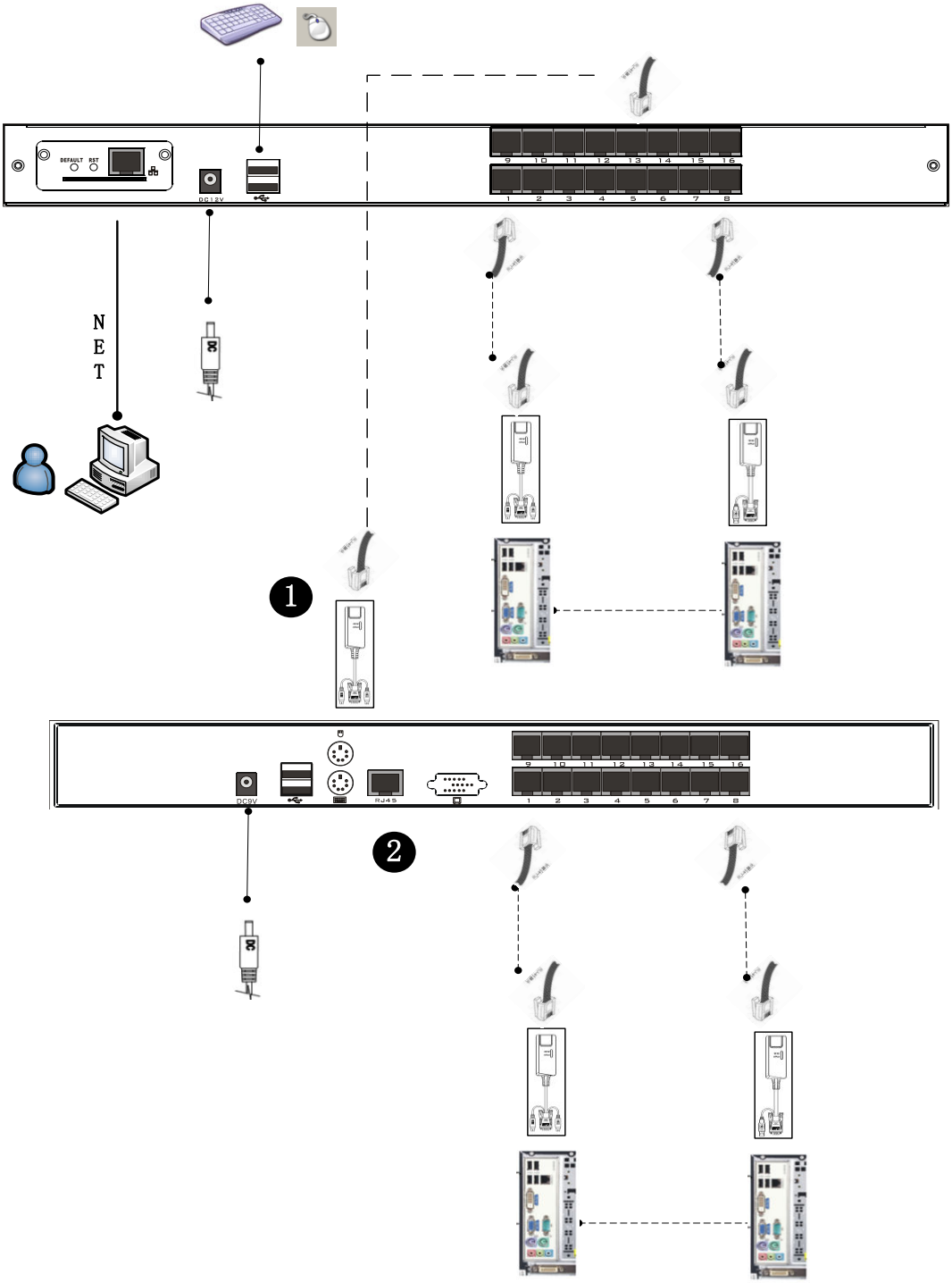

Note: Cascade Mode divides into two levels. Set the switch in the OSD Menu with two levels of Hot Keys for two different Hot Key combinations, or the OSD will not start when cascaded. (Refer to the OSD chapter for details on the OSD Hot Key settings.) For display problems caused by transmission distance, electromagnetic interference, common ground, etc., Intellinet recommends using Cat6 shielded network cable to connect and try to improve the display effect.

Chapter 3 – Basic Operations

3.1 Hot-Swap

The KVM switch supports hot-swapping, which allows the user to remove components by unplugging the cables that are connected computer's port without having to shut down the switch. To make the hot-swap function work properly, adhere to this information and/or follow these steps:

Hot-swap Computer Connection
In order for the On-Screen Display (OSD) Menu to correspond to the KVM connection-port changes, you must reset the OSD Menu to display the latest connection port information and OSD menu settings. Refer to the OSD Menu section for more information about functions and usage.

Hot-Swap Console Port
This product also supports the hot-swap function for the keyboard, mouse and display. It also provides keyboard and mouse ports for two interface types. Users can select the corresponding device-connection type according to their usage and carry out corresponding control operation. NOTE: If you access the USB and PS2 keyboard and mouse device, you do not have to use two types of devices.

3.2 Connection Port Selection

The KVM switch can be used to quickly switch to any computer connected to the KVM in three modes: Manual Selection, OSD Menu Screen Selection and Hot Key Selection.

3.2.1 Manual Switching:

Use the buttons on the front control panel to select a port.

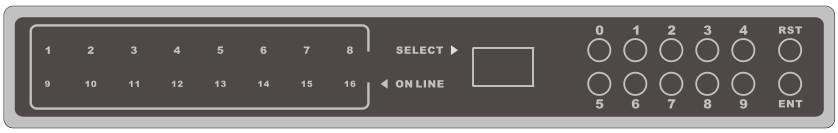

ˆ8-port model shown

✚ The panel is divided into three areas — from left to right: the online indicator display area, the Port Switch to Select the display area, and the Port Switch digital button area.

- Online Indicator Display Area
  The LEDs in the display area are lit when the controlled computer that is connected to KVM Port is connected to the line. The LED indicating the port number is illuminated and the KVM online Port status is shown.
- Port Switch the Display Area
  The digital LED indicator in the display area shows the port number of the current working port when status is displayed or the numeric key number for input when the key switch port changes.
- Port Switch Digital Button Area
  This area has the numeric keys of [0] - [9] and [RST] (reset button), [ENT] (confirm button). The number keys are used to select the port. Input the corresponding port number and press【ENT】to jump to that computer. To reset the KVM switch, click [RST] for 3-5 seconds.

3.2.2 OSD Menu Screen Selection

LCD OSD Menu key operation:

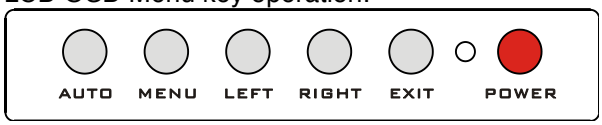

✚*Hotkey Selection*

【AUTO】Sets the display setting for the screen to automatically adjust resolution
【MENU】Opens the main menu of the display
【LEFT】Selects the direction within the OSD menu and moves the current selection to the left by one unit
【RIGHT】Selects the direction within the OSD menu and moves the current selection to the right by one unit
【EXIT】Exits the OSD menu
【POWER】Turns the LCD screen on and off

LED for LCD screen status–Indicates different statuses with different colors: red, green, and none. Red indicates that the LCD screen is connected to power but not receiving a video signal. Green indicates that the LCD is displaying the video signal of the controlled computer. No display means the power to LCD screen is off.

3.2.3 Hot Key Selection

This product offers four hotkey switching methods:

【SCRLL】+【SCRLL】+【NUM】/

【CTRL】+【CTRL】+【NUM】/

【ALT】+【ALT】+【NUM】/

【SHIFT】+【SHIFT】+【NUM】

The default hot-key toggle combination is [SCRLL] + [SCRLL] + [NUM], where [NUM] is the keyboard number 1-16. The KVM switch will switch to the corresponding computer of the port number. To change the key combination of the hotkey, set and change it in the corresponding option of OSD Menu.

3.3 Power Off and Restart

To power off the KVM switch, do the following before turning it back on:

1. Unplug its power supply.
2. Turn off all computers that are connected to the KVM switch.
3. Wait 10 seconds; then, reconnect the KVM switch.
4. Turn on the computer.

3.4 Opening / Closing / Locking the LCD

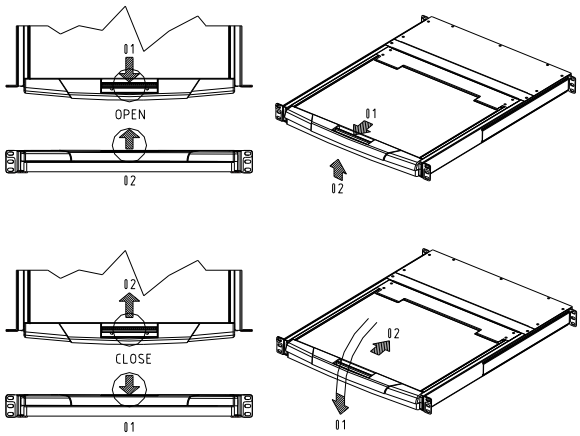

1. To open the LCD display screen, flip the screen upwards. The maximum angle that the LCD screen can be opened is 105 –120°.
2. When in use, the LCD can be unlocked from the side track by the handle on the upper part of the LCD unit. After unlocking, the LCD module can be pulled out from the slide rail. (Refer to the diagram above for operation.)
3. The screen will automatically pull out the slide after the brake locks the device to prevent random sliding of the LCD screen components. After the brake lock is activated, the LCD screen will limit the operation by pushing the slide rail. To manually unlock the KVM switch from the slide rail, pull back both sides locked buttons on each slide rail. (Refer to the figure above for the specific operation). After unlocking, pushed the switch into the slide rail.

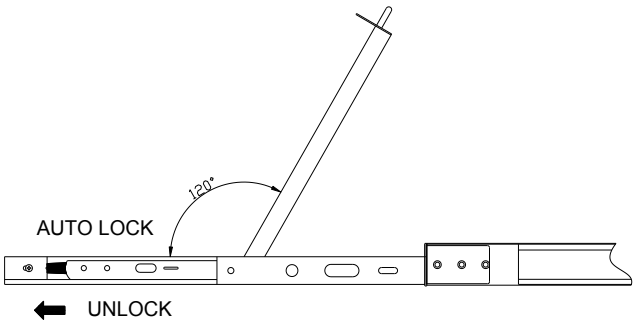

Chapter 4 – On-Screen Display (OSD) Operations

This chapter reviews how the switch's menu-driven interface handles the computer switching procedure and provides instant access to any computer on the installation.

4.1 OSD Login

The OSD function provides a two-level (administrator / user) password mechanism. The factory default setting—i.e., first-time access—does not require login-password authentication. The default administrator password is **admin**. To add a password, enter the OSD menu, and press the 【F6】 "SET" option to set the login password successfully. The subsequent login requires the correct administrator / user to enter the password in the OSD menu Interface operation. When entering the setting options, some functions may need to be edited and modified by the administrator. Modify and change them as needed.

4.2 OSD Hot Key

By default, press the [CTRL] key twice for the OSD menu to appear on the screen of the controlled display and see the connection/status information and the connected computers.

4.3 OSD Main Menu

- 【F1】–【F6】 at the bottom of the screen accesses the functions of OSD menu, their corresponding operations and the setting of corresponding functions by keyboard.
- After entering the OSD main screen, the port number in the center of the screen is the port number of the selected PC. To move up and down through the list one line at a time, use the【↑】 【↓】Arrow Keys and press 【Enter】 to select the switch port. If the number of rows in the list is larger than the number that the screen can display, the screen scrolls.
- Press【Esc】to exit the OSD menu interface.
- When the OSD menu is closed, a small blue window will appear on the screen that shows the port number that switch is currently switched to.

4.4 OSD Main Screen Headings

Heading	Explanation
PN	This column lists the port numbers for all the CPU ports on the installation. The simplest method to access a particular computer is to move the highlight bar to it, then press [Enter].
QV	If a port has been selected for Quick View scanning, an arrowhead symbol displays in this column to indicate so.
PC	The computers that are powered on and are on line have an arrowhead symbol in this column to indicate so.
NAME	If a port has been given a name, its name appears in this column.

4.5 OSD Functions

OSD functions are used to configure and control the OSD. These functions allow you to rapidly switch to any port, scan selected ports only, limit the list of views, designate a port as a Quick View Port, create or edit a port name, or make OSD-setting adjustments.

To activate the OSD function key:

1. Press any function key【F1】–【F6】 at the bottom of main screen to input the function key.
2. On the sub-menu, move the selection column to the option, and then press the 【Enter】 key.
3. Press the【Esc】key to return to the previous menu.

4.5.1 F1:GOTO

1. To use the “NAME” method, move the highlight bar to “NAME" and press 【Enter】. Input the name of a port, then press [Enter] to confirm.
2. To use the "PN" method, move highlight bar to “PN” and press 【Enter】. Input the port number, and then press 【Enter】 to switch. If the port number is invalid, it will remind the user to input again.
3. To return to main menu, press [Esc].

Note:

1. When keying a name that matches one that already exists, the matched name will appear on the screen. Press 【Enter】 to switch to that port.
2. In the "PN" port input box, only allow the input of numbers. The input of other characters is regarded as invalid—the equipment notes this to the user by issuing a warning tone.

4.5.2 F2:SCAN

The "SCAN" function performs automatic port scanning of the connected computers. Users can switch ports in order to view the corresponding port computer status.

- The SCAN function can automatically scan from the current selected port; users can set the scan interval.
- When scanning, a small window on the screen indicates the current port number.
- Press [Space] to stop scanning, and the KVM switches to the port last scanned.

4.5.3 F3:LIST

The LIST function enables the broadening or narrowing of the scope for which ports the OSD will display on the main screen.

Many of the OSD functions only operate on the computers that have been selected for listing on the main screen with this function. The choices and their meanings are given in the table below:

Choice	Meaning
ALL	Lists all of the ports on the installation.
QVIEW	Lists only the ports that have been selected as Quick View Ports.
POWERED ON	Lists only the ports that have their attached computers powered on.
POWERED ON + QVIEW	Lists only the ports that have their attached computers powered on and have been selected as Quick View Ports.
QVIEW + NAME	Lists only the ports that have been selected as Quick View Ports and have name.
NAME	Lists only the ports that have names.

Move the highlight bar to the desired selection, then press [Enter]. An icon appears before the choice to indicate that it is currently selected. Afterward is a return to the OSD main screen with the newly formulated list displayed.

4.5.4 F4 QV

The QV function selects a port for Quick View. Move the highlight bar to a port, press [F4] and an icon of an upward facing triangle appears. Press [F4] again and the icon disappears.

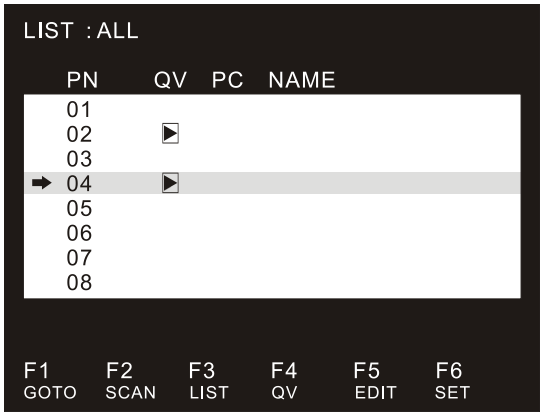

4.5.5 F5 EDIT

The EDIT function creates or edits the name of a port. Pressing [F5] brings up a pink edit box. Input a name, and then press [Enter]. The port is set a name and it will appear on the screen.

4.5.6 F6:SET

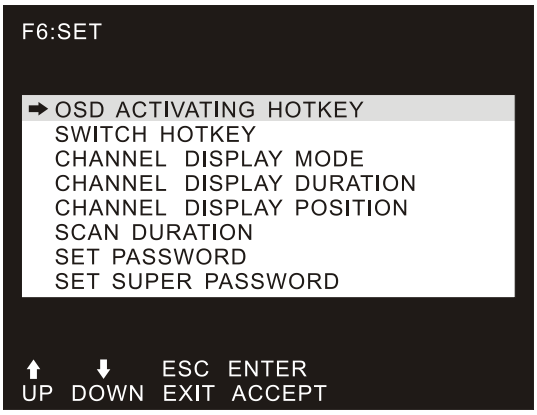

To change the settings:

1. Move the highlight bar to an option and press 【Enter】.
2. After selecting an item, the sub-menu and the further options provided will appear. To select it, double-click the mouse or move the selection column to the option, and then press the [Enter] key; an icon will appear. Select the option before to indicate that the item has been selected. The settings are described in the following table:

Settings	Function
OSD ACTIVATING HOTKEY	OSD Menu Activates hotkey combination selection settings
SWITCH HOTKEY	KVM port switch hot-key combination selection setting
CHANNEL DISPLAY MODE	Port display mode selection
CHANNEL DISPLAY DURATION	Select the Port form to display the Dwell Time setting
CHANNEL DISPLAY POSITION	Select the port form display location settings
SCAN DURATION	Port scan dwell time setting
SET PASSWORD	User login password settings
SET SUPER PASSWORD	The administrator login password settings
CLEAR THE NAME LIST	Clear the port name setting
RESTORE DEFAULT VALUE	Reset
LOCK CONSOLE	OSD Menu Password Login Function settings

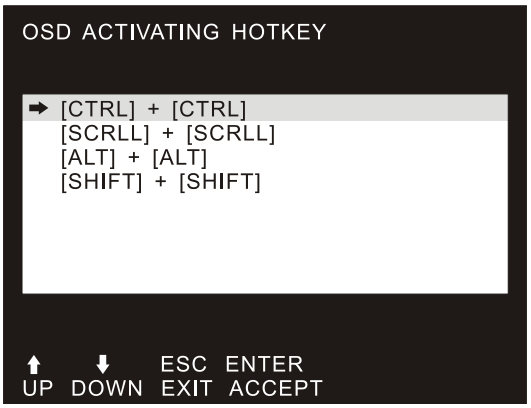

4.5.6.1 OSD ACTIVATING HOTKEY

This screen provides the user with four hotkey combinations. Use the keyboard's 【↑】 【↓】 buttons to move the cursor to select an item, and then press 【Enter】 to save. The default is to use 【CTRL】【CTRL】as the OSD menu start hotkey.

4.5.6.2 SWITCH HOTKEY

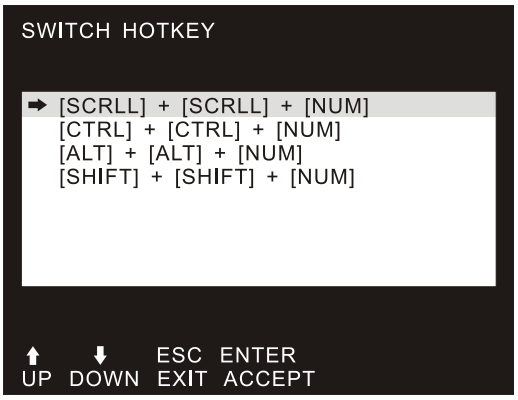

This screen provides the user with four hotkey combinations. Use the keyboard's 【↑】 【↓】 buttons to move the cursor to select an item, and then press 【Enter】 to save. The default is to use【SCRLL】【SCRLL】【NUM】 as the OSD menu start hotkey.【NUM】 is the numeric keypad of the keyboard. Depending on the model number a valid numeric range can be from 【1】 - 【16】.

4.5.6.3 CHANNEL DISPLAY MODE

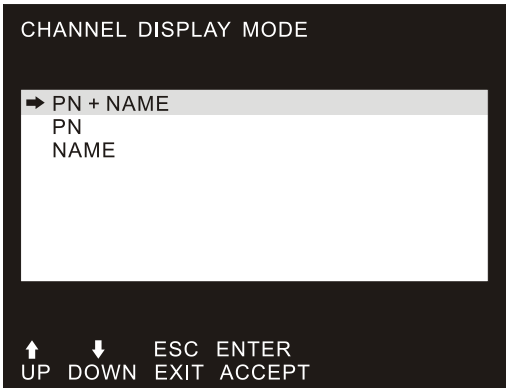

This function provides three different port display modes: PN + NAME (the port number and port name), PN (only shows the port number), and NAME (only shows the port name). Adjust this according to system requirements. The initial default is PN + NAME mode.

4.5.6.4 CHANNEL DISPLAY DURATION

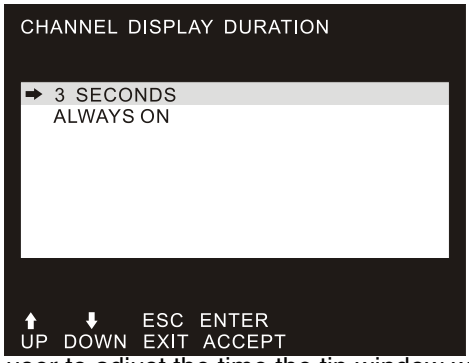

This screen allows the user to adjust the time the tip window will stay on screen.
The options are as follows:

- 3 SECOND—The tip window lasts for 3 seconds;
- ALWAYS ON—The tip window is always on the screen.

4.5.6.5 CHANNEL DISPLAY POSITION

This screen allows the user to adjust the position of the tip window.
A small blue window appears on the screen. Use an arrow key to move it; then, press [Enter] to specify the position.

4.5.6.6 SCAN DURATION

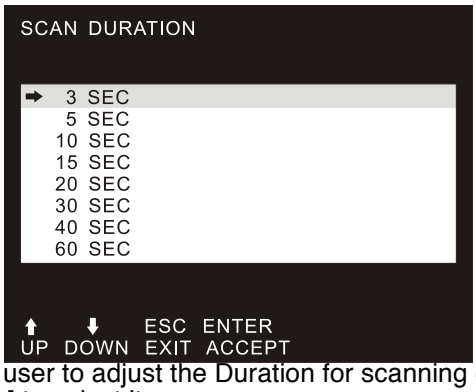

This screen allows the user to adjust the Duration for scanning one port. Move the highlight bar to an option and press [Enter] to select it.

4.5.6.7 SET PASSWORD

This screen allows the user to set a new password. First, enter the old password; then, enter a new password and confirm it. The new password is set. If an error occurs, the screen will remind users.

4.5.6.8 SET SUPER PASSWORD

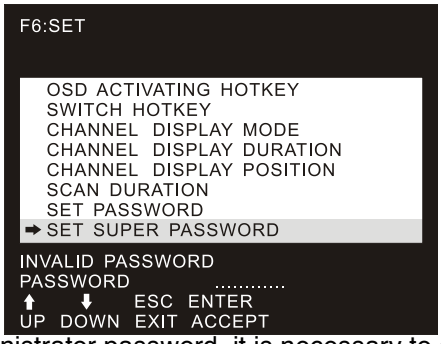

When setting the administrator password, it is necessary to enter the correct password. Before a new password is updated, input the previous password twice for the new password to take effect.

4.5.6.9 CLEAR THE NAME LIST

This function clears the name of a port in the OSD menu. If you use this function, all the port names will be emptied, so proceed carefully. It is necessary to verify the administrator password. Afterward, input the 【Y】key and press【Enter】 to confirm the operation. To cancel this operation, input【N】key and press 【Enter】 to confirm, or use the keyboard input 【Esc】 to go directly back.

4.5.6.10 RESTORE DEFAUL VALUE

This function allows the user to restore settings to default value, so proceed with caution. To do so, it is necessary to verify the administrator password. Afterward, input the 【Y】key and press【Enter】 to confirm the operation. To cancel this operation, input【N】key and press 【Enter】 to confirm, or use the keyboard input 【Esc】 to go directly back.

4.5.6.11 LOCK CONSOLE

It is not possible to switch or scan after the console has been locked (including switching by pushing a button on the panel or OSD). The user must enter a password to set.

Note: After locking the console, the user will unlock the console by using this option, which also needs password verification.（Descriptions of the OSD Menu functions may vary. Refer to the description of each interface KVM switch manual for details.）

Appendix

A–1 General Safety Instructions

- This product should only be used indoors.
- Read all the instructions for future reference.
- Follow all the warnings and instructions on the device.
- Do not place this equipment on any unstable surface. If this equipment falls, it will cause serious damage.
- Do not use this equipment near water.
- Do not place this equipment near or over a radiator or other types of heating equipment.
- The enclosure is provided with slots for heat dissipation and ventilation. To prevent overheating during operation, do not block or cover the openings.
- Do not place the device on a soft surface (such as a bed, sofa, blanket, etc.). This will block proper ventilation. Likewise, do not place this equipment in a sealed environment unless proper ventilation is provided.
- Do not spray any liquid on the device.
- Before cleaning, unplug the power from the wall socket. Do not use any liquid or foam cleaner. Use a damp cloth to clean it.
- Use this equipment according to the type of power supply on the label. If you are unsure whether the power supply type is available, contact your dealer or the local power company.
- This equipment is designed for an IT distribution system with 100V ~ 230V phase-to-phase voltage.
- To prevent damage to your device, it is important that all equipment be properly grounded.
- Do not place anything on the power cord or cable. Route the power cord and other cables to avoid tripping over them.
- If the equipment uses an extension cord, make sure that the total capacity of all products using the line does not exceed the current-carrying capacity of the line. Ensure that the total current of all products plugged into the wall outlet does not exceed 15A.
- Use a surge suppressor, regulator, or uninterruptible power supply (UPS) to help protect your system from sudden, transient, and reduced power.
- Fix the system cable and power cord properly, and make sure nothing presses on the cable.
- Do not insert objects into the machine through the slots of the housing. There is a risk of exposure to dangerous voltage points or short-circuiting of parts that could result in fire or electric shock.
- Do not attempt to repair the equipment by yourself. Consult a qualified service person for support.
- If any of the following conditions occur, unplug the unit from the wall outlet and return it to a qualified service representative for repair.
- The power cord or plug is damaged or worn;
- Liquid is spilled into the unit;
- The device is exposed to rain and water;
- The device has been dropped or the housing has been damaged;
- The function of the device is obviously changed; or,
- The machine can't be operated normally as instructed by the operating instructions.

A–2 Cabinet Installation

- Before cabinet installation, make sure that the fixing device is securely fastened to the rack and extended to the ground. The weight of the whole rack can be dispersed on the floor. Mount the front and side securing devices in a single rack or the front-end fixtures in combination with multiple racks before starting rack work.
- Install from the bottom up in the cabinet, and install the heaviest things first.
- When extending the equipment from the rack, make sure that the rack is stable.
- Be careful when releasing the latch by pressing the device rails and sliding the unit into the rack. The track of the slide rail may clip to your finger.
- After mounting the device to the rack, carefully spread the rails to the locked position, and then slide the unit into the rack.
- Do not overload the AC supply branch circuit that supplies power to the rack. The total load capacity of the rack should not exceed 80% of the branch circuit.
- Make sure that all equipment used on the rack – including electrical outlets and other power connectors – is properly grounded.
- Make sure there is proper airflow to the equipment on the rack.
- Make sure that the operating temperature of the rack environment does not exceed the maximum operating temperature set by the manufacturer.
- Do not stand on or place undue pressure on any equipment while you are servicing other equipment on the rack.
- WARNING: Slide / rail (LCD / KVM) mounting equipment cannot be used with support brackets or work areas.

A–3 Specifications

A.3.1 VGA Series LCD KVM Switch

Function				8 口	16 口
Connectors	Direct			8	16
	Cascade(Max)			128	256
Port Selection			OSD Menu, Front Panel Hot-Key, Hot-key, Remote Control IP (Optional)		
Connectors	Console Connectors	Video	17”\19”\19”Wide LED Screen		
		Keyboard	1 x USB Type A Female		
		Mouse	1 x USB Type A Female		
		Expansion Port	1 x USB Type A Female（Prepositive port for keyboard, mouse）		
	Computer Port	Monitor, Keyboard, Mouse	4 x VGA DB15bluefemale	8 x VGA DB15bluefemale	16 x VGA DB15bluefemale
	Power		1 x DC Jack		
	IP module network port		1 x RJ45		
Toggle Switch	Connection Port Selection		KVM operation panel Numeric buttons		
	KVM reset		KVM operation panel function buttons		
	IP Module reset		1 x Semi-embedded keys		
	IP Module restored initially		1 x Semi-embedded keys		
LED Indicator light	Computer Select port		Two-digit LED display LED		
	Computer Online port		4 x red	8 x red	16 x red
	IP module network port		1 x green 、 1 x orange		
Analog Mode	Keyboard Mouse		USB、PS2		
Maximum resolution video			1920 x 1200 @ 60HZLocal and remote		
Scan time interval			3、5、10、15、20、30、40、60 seconds（default 3 seconds）		
Operation Environment	Operating temperature		0-50°C		
	Storage temperature		-20-60°C		
	Humidity		0-80%RH,No condensation		
Machine Attributes	Chassis		Metal		
	Single slide size		555 x 445 x 45mm		
	Dual slide size		645 x 443 x 45mm		
	Weight		16.6KG-18.1KG		

A.3.2 Cat5 Series LCD KVM Switch

Function				8 口	16 口
Computer Connections	Direct			8	16
	Cascade(Max)			128	256
Port Selection			OSD Menu, Buttons, Hot-key, Remote Control IP (Optional)		
Connector	Console Connectors	Video	17”\19”\19”wide-screen LCD Monitor		
		Keyboard	1 x USB Type A Female		
		Mouse	1 x USB Type A Female		
		Expansion Port	1 x USB Type A Female (Prepositive USB port for keyboard, mouse)		
	Computer Connectors	Video keyboard& mouse conversion module	4 x USB or 4 x PS2	8 x USB or 8 x PS2	16 x USB or16 x PS2
		Conversion module port	4 x RJ45	8 x RJ45	16 x RJ45
	Power		1 x DC Jack		
	IP module network port		1 x RJ45		
Toggle switch	Connection Port Selection		KVM operation panel Numeric buttons		
	KVM reset		KVM operation panel function buttons		
	IP Module reset		1 x Semi-embedded keys		
	IP Module restored initially		1 x Semi-embedded keys		
LED Indicator light	Computer Select port		Two-digit LED display LED		
	Computer Online port		4 x red	8 x red	16 x red
	IP module network port		1 x green 、 1 x orange		
Analog mode	Keyboard Mouse		USB、PS2		
Maximum resolution video			1920 x 1200 @ 60HZ local & remote		
Scan time interval			3、5、10、15、20、30、40、60 seconds（default 3 seconds）		
Operation Environment	Operating temperature		0-50°C		
	Storage temperature		-20-60°C		
	Humidity		0-80%RH,No condensation		
Machine Attributes	Chassis		Metal		
	Single slide size		555 x 445 x 45mm		
	Dual slide size		645 x 443 x 45 mm		
	Weight		16.6KG-18.1KG		

A.3.3 DVI Series LCD KVM Switch

Function			8 口	
Connectors	Direct		8	
Port Selection			OSD Menu, Buttons, hot keys	
Connectors	Console Port	Monitor	17”\19”\19”Wide-Screen LCD Monitor	
		Keyboard	1 x USB Type A female	
		Mouse	1 x USB Type A female	
		Expansion Port	1 x USB Type A Female (Prepositive port for Keyboard, mouse)	
		Microphone	4 x Mini Stereo Female(Pink)	8 x Mini Stereo Female(Pink)
		Audio speakers	4 x Mini Stereo Female(green)	8 x Mini Stereo Female(green)
	Computer Port	Keyboard, Mouse	4 x USB Type B Female	8 x USB Type B Female
		Video	4 x DVI-I	8 x DVI-I
		Mixed audio port	4 x Mini Stereo Female(black)	8 x Mini Stereo Female(black)
	Power		1 x DC jack	
Toggle switch	Connection Port Selection		KVM operation panel Numeric buttons	
	KVM reset		KVM operation panel function buttons	
LED Indicator light	Computer Select port		Two-digit LED display LED	
	Computer Online port		4 x red	8 x red
Analog mode	Keyboard, Mouse		USB Type A	
Maximum resolution video			1920 x 1200 @ 60HZ Local	
Scan time interval			3、5、10、15、20、30、40、60seconds（default 3 seconds）	
Operation Environment	Operating temperature		0-50°C	
	Storage temperature		-20-60°C	
	Humidity		0-80%RH,No condensation	
Machine Attributes	Chassis		Metal	
	Size		555 x 445 x 45mm	
	Weight		16.6KG-18.1KG	

A.3.4 LCD Module Specifications

Function		17inchLCD module	19inchLCD module	19inchwide-screen LCD module
LCD Display Assembly	LCD Screen Size Ratio	17inch4:3	19inch4:3	19inch16:9
	LCD Screen Type	SXGA TFT-LCD		Wide AHVA TFT-LCD
	Viewing Area	337.920(H) × 270.336(V)	376.32 (H) x 301.056 (V)	408.96(H) x 230.04(V)
	Resolution	1280*1024@60HZ		1980*1080@60HZ
	Support color	16.7M color（RGB 6 bit + Hi_FRC）		16.7Mcolor,True 8 bit
	Contrast	1000 : 1 (Typ)		
	Backlight	LED		
	Pixel spacing	0.264x0.297mm	0.294x0.294mm	300*300um
	LEDService life	100,000Hours		
	Nominal Input Voltage	+5.0V		
Keyboard	Keyboard Layout	Ultra-thin US100 key, Stand alone Removable keyboard. (Keyboard language format optional)		
	Compatible	Microsoft Windows9、Me/NT/2000/XP、WIN7、Server2003、 WIN8、WIN10		
	Port	Standard PS/2;USB （Chocolate keyboard）		
	Service life	>1,000,000 times		
Mouse	Mouse Type	Touch Mouse		
	Port	Standard PS/2		
	X/Y resolution	〉1000 point/inch,（40x40/mm)		
	Service life	>1,000,000 times		

Warranty

ENGLISH: For warranty information, go to intellinetnetwork.com/warranty.
DEUTSCH: Garantieinformationen finden Sie hier unter intellinetnetwork.com/warranty.
ESPAÑOL: Si desea obtener información sobre la garantía, visite intellinetnetwork.com/warranty.
FRANÇAIS: Pour consulter les informations sur la garantie, visitez intellinetnetwork.com/warranty.
POLSKI: Informacje dotyczące gwarancji znajdują się na stronie intellinetnetwork.com/warranty.
ITALIANO: Per informazioni sulla garanzia, accedere a intellinetnetwork.com/warranty.
EN MÉXICO: Póliza de Garantia Intellinet — Datos del importador y responsable ante el consumidor—IC Intracom México, S.A.P.I. de C.V. Av. Interceptor Poniente # 73, Col. Parque Industrial La Joya, Cuautitlán Izcalli, Estado de México, C.P. 54730, México. • Tel. (55) 1500-4500
La presente garantía cubre este producto por 3 años contra cualquier defecto de fabricación en sus materiales y mano de obra, bajo las siguientes condiciones:

Todos los productos a que se refiere esta garantía, ampara su cambio físico, sin ningún cargo para el consumidor.

El comercializador no tiene talleres de servicio, debido a que los productos que se garantizan no cuentan con reparaciones, ni refacciones, ya que su garantía es de cambio físico.

La garantía cubre exclusivamente aquellas partes, equipos o sub-ensambles que hayan sido instaladas de fábrica y no incluye en ningún caso el equipo adicional o cualesquiera que hayan sido adicionados al mismo por el usuario o distribuidor.

Para hacer efectiva esta garantía bastará con presentar el producto al distribuidor en el domicilio donde fue adquirido o en el domicilio de IC Intracom México, S.A.P.I. de C.V., junto con los accesorios contenidos en su empaque, acompañado de su póliza debidamente llenada y sellada por la casa vendedora (indispensable el sello y fecha de compra) donde lo adquirió, o bien, la factura o ticket de compra original donde se mencione claramente el modelo, número de serie (cuando aplique) y fecha de adquisición. Esta garantía no es válida en los siguientes casos: Si el producto se hubiese utilizado en condiciones distintas a las normales; si el producto no ha sido operado conforme a los instructivos de uso; o si el producto ha sido alterado o tratado de ser reparado por el consumidor o terceras personas.

NOTES

All trademarks and trade names are the property of their respective owners.
© IC Intracom. All rights reserved. Intellinet is a trademark of IC Intracom, registered in the U.S. and other countries.