DS45-600BL2V

NEOMOUNTS DS45-600BL2V DUAL MONITOR

SPECIFICATIONS

GENERAL

Min. screen size*	10 inch
Max. screen size*	32 inch
Max. weight	9 kg (per screen)
Screens	1
VESA minimum	75X75 mm
VESA maximum	100x100 mm
Desk mount	Stand
Distance to wall	15,3 cm

FUNCTIONALITY

Type	Tilt Rotate Swivel
Height adjustment	14-83 cm
Lockable	Not lockable
Tilt (degrees)	90°
Swivel (degrees)	180°
Rotate (degrees)	360°
Height	87,7 cm
Width	42 cm
Depth	29,7 cm
Adjustment type	Manual

INFORMATION

Color	Black
Main material	Steel
Warranty	5 year
EAN code	8721246340652

*Please note: The inch sizes stated are just an indication, combined with the weight and VESA sizes. The maximum weight and VESA size are absolute restrictions for the products and should not be exceeded.

Neomounts

Neomounts

Neomounts DS45-600BL2V dual monitor stand - 10-32" - 0-9 kg | 19,8 lbs (2x) - 90° tiltable - 360° rotatable - 180° swivel- VESA 75x75 - Black

The Neomounts DS45-600BL2V offers a premium solution for users who prefer a vertical, stacked monitor setup. Designed to hold two screens up to 32" (9 kg per screen), this full motion stand provides exceptional flexibility. Thanks to the advanced tilt (90°), rotate (360°), and swivel (180°) technology, you can effortlessly align your monitors to create the most comfortable and ergonomic workspace.

This model excels in saving valuable desk space by utilizing vertical height. The robust construction ensures your monitors remain perfectly stable at all times. With the integrated cable management system, your desk stays free of clutter, while the built-in phone slot in the base keeps your smartphone within reach.

The stand is compatible with VESA patterns 75x75 and 100x100 mm. The Easy-release VESA system allows for a smooth and quick installation of the screens. The DS45-600BL2V is a high-quality, durable choice for any professional environment or sophisticated home office.

Neomounts®

DS45-600BL2V

NEOMOUNTS DS45-600BL2V DUAL MONITOR

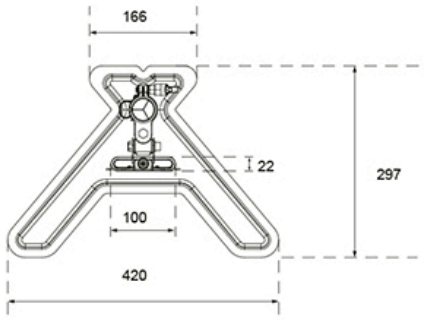

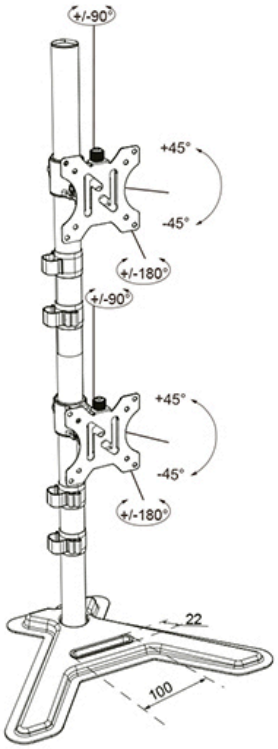

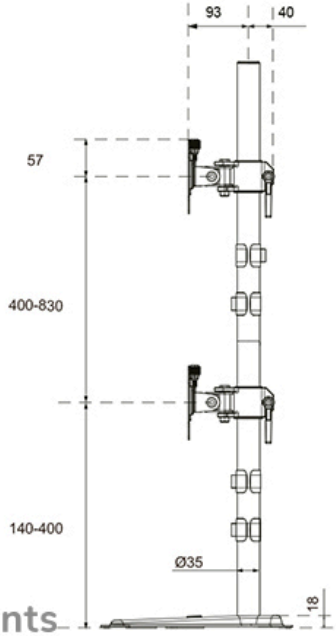

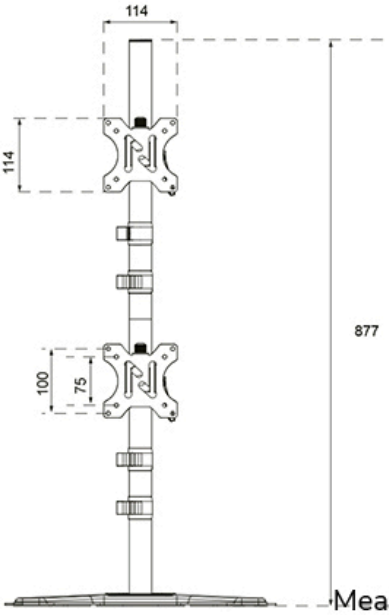

Neomounts

Measuring unit: mm