DS60-600BL2-2

SPECIFICATIONS

GENERAL

Min. screen size*	10 inch
Max. screen size*	32 inch
Max. weight	8 kg (per screen)
Screens	1
VESA minimum	75X75 mm
VESA maximum	100x100 mm
Desk mount	Grommet Clamp
Distance to wall	10,7 cm

FUNCTIONALITY

Height adjustment	14-83 cm
Width adjustment	39,7 cm
Depth adjustment	10,7-46,3 cm
Lockable	Not lockable
Tilt (degrees)	90°
Swivel (degrees)	180°
Rotate (degrees)	360°
Height	87,4 cm
Width	90,8 cm
Depth	11 cm
Adjustment type	Manual

INFORMATION

Color	Black
Main material	Steel
Warranty	5 year
EAN code	8721246340690

*Please note: The inch sizes stated are just an indication, combined with the weight and VESA sizes. The maximum weight and VESA size are absolute restrictions for the products and should not be exceeded.

NEOMOUNTS DS60-600BL2-2 QUADRUPLE

Neomounts DS60-600BL2-2 Quadruple monitor arm - 10-32" - 0-8 kg | 17,6 lbs (4x) - 90° tiltable - 360° rotatable - 180° swivel - VESA 75x75 - 180° lock - Black

The Neomounts DS60-600BL2-2 provides a professional and durable solution for a stacked four-screen configuration. This quadruple monitor arm is constructed with a solid vertical pole and supports four monitors up to 32" with a weight capacity of 8 kg per screen. The full motion technology allows for precise adjustments in tilt, rotation, and swivel for each monitor, ensuring a correct ergonomic posture and optimal workflow efficiency across all displays.

This model is specifically suited for financial institutions, control rooms, and corporate offices where the simultaneous management of vast amounts of data is essential. The robust construction guarantees maximum stability, while the integrated 180° lock mechanism protects the surrounding environment by preventing the arms from making contact with walls or partitions. The design features a subtle phone slot in the base and an integrated cable management system to maintain a professional and organized workspace.

The arm is VESA compatible (75x75 & 100x100 mm) and includes an Easy-release system for the efficient mounting of the screens. The DS60-600BL2-2 comes with both desk clamp and grommet mounting options, making it a versatile high-quality investment for any intensive professional work environment.

Neomounts®

DS60-600BL2-2 NEOMOUNTS DS60-600BL2-2 QUADRUPLE

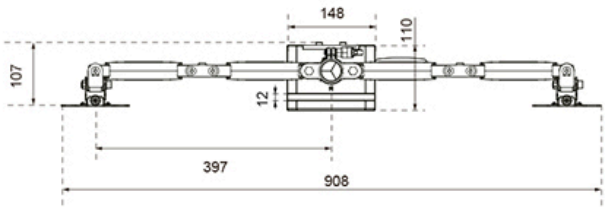

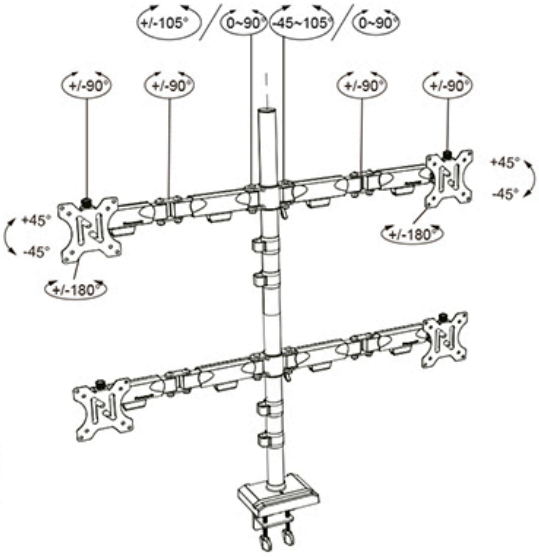

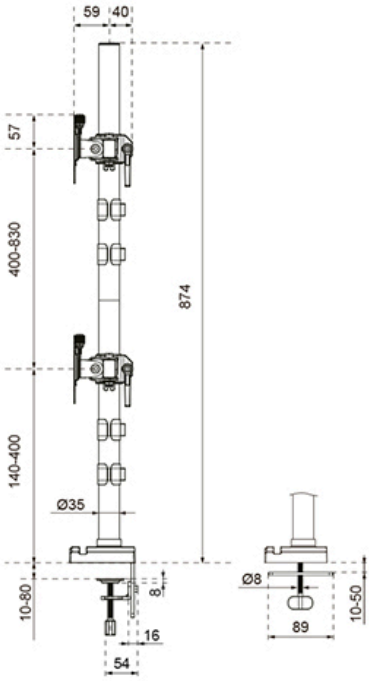

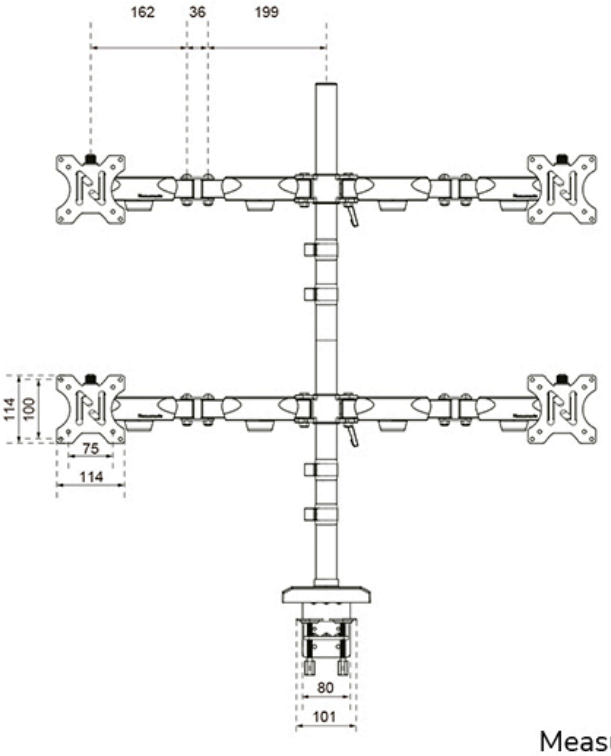

Neomounts

Measuring unit: mm