BenQ

XL

MONITOR FOR e-SPORTS

XL Series
User Manual

Copyright

Copyright © 2021 by BenQ Corporation. All rights reserved. No part of this publication may be reproduced, transmitted, transcribed, stored in a retrieval system or translated into any language or computer language, in any form or by any means, electronic, mechanical, magnetic, optical, chemical, manual or otherwise, without the prior written permission of BenQ Corporation.

Disclaimer

BenQ Corporation makes no representations or warranties, either expressed or implied, with respect to the contents hereof and specifically disclaims any warranties, merchantability or fitness for any particular purpose. Further, BenQ Corporation reserves the right to revise this publication and to make changes from time to time in the contents hereof without obligation of BenQ Corporation to notify any person of such revision or changes.

The performance of flicker-free may be affected by external factors such as poor cable quality, unstable power supply, signal interference, or poor grounding, and not limited to the above mentioned external factors. (Applicable for flicker-free models only.)

BenQ ecoFACTS

BenQ has been dedicated to the design and development of greener product as part of its aspiration to realize the ideal of the "Bringing Enjoyment 'N Quality to Life" corporate vision with the ultimate goal to achieve a low-carbon society. Besides meeting international regulatory requirement and standards pertaining to environmental management, BenQ has spared no efforts in pushing our initiatives further to incorporate life cycle design in the aspects of material selection, manufacturing, packaging, transportation, using and disposal of the products. BenQ ecoFACTS label lists key eco-friendly design highlights of each product, hoping to ensure that consumers make informed green choices at purchase. Check out BenQ's CSR Website at http://csr.BenQ.com/ for more details on BenQ's environmental commitments and achievements.

Product support

This document aims to provide the most updated and accurate information to customers, and thus all contents may be modified from time to time without prior notice. Please visit the website for the latest version of this document and other product information. Available files vary by model.

1. Make sure your computer is connected to the Internet.
2. Visit the local website from ZOWIE.BenQ.com. The website layout and content may vary by region/country.
   - User manual and related document: ZOWIE.BenQ.com > **Support** > **Download & FAQ** > model name > **User Manual**
   - Drivers: ZOWIE.BenQ.com > **Support** > **Download & FAQ** > model name > **Driver**
   - Software and applications: ZOWIE.BenQ.com > **Support** > **Download & FAQ** > model name > **Software**
   - (EU only) Dismantled information: Available on the user manual download page. This document is provided based on Regulation (EU) 2019/2021 to repair or recycle your product. Always contact the local customer service for servicing within the warranty period. If you wish to repair an out-of-warranty product, you are recommended to go to a qualified service personnel and obtain repair parts from BenQ to ensure compatibility. Do not disassemble the product unless you are aware of the consequences. If you cannot find the dismantled information on your product, contact the local customer service for assistance.

EPREL Registration Number:
XL2731K: 667659
XL2746K: 673898

Power safety

Please follow these safety instructions for best performance, and long life for your monitor.

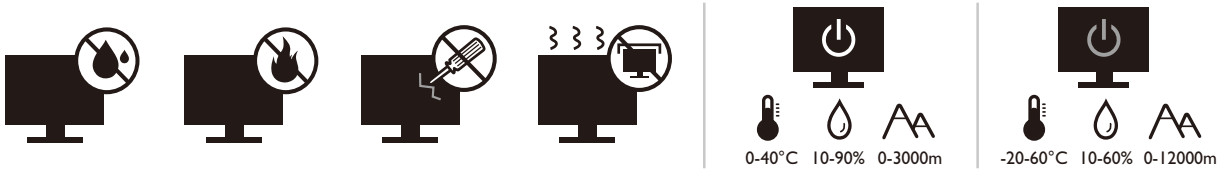

- The AC plug isolates this equipment from the AC supply.
- The power supply cord serves as a power disconnect device for pluggable equipment. The socket outlet should be installed near the equipment and be easily accessible.
- This product should be operated from the type of power indicated on the marked label. If you are not sure of the type of power available, consult your dealer or local power company.
- The Class I pluggable equipment Type A must be connected to protective earth.
- An approved power cord greater or equal to H03VV-F or H05VV-F, 2G or 3G, 0.75mm^2 must be used.
- Use only the power cord provided by BenQ. Never use a power cord that appears to be damaged or frayed.

For Germany only:

- (If the weight of the product is less than or equal to 3 kg) An approved power cord greater or equal to H03VV-F, 3G, 0.75mm^2 must be used.
- (If the weight of the product is more than 3 kg) An approved power cord greater or equal to H05VV-F or H05RR-F, 3G, 0.75mm^2 must be used.
- (If a remote control is provided) RISK OF EXPLOSION IF BATTERY IS REPLACED BY AN INCORRECT TYPE. DISPOSE OF USED BATTERIES ACCORDING TO THE INSTRUCTIONS.

For models with adapter:

- Use only the power adapter supplied with your LCD Monitor. Use of another type of power adapter will result in malfunction and/or danger.
- Allow adequate ventilation around the adapter when using it to operate the device or charge the battery. Do not cover the power adapter with paper or other objects that will reduce cooling. Do not use the power adapter while it is inside a carrying case.
- Connect the power adapter to a proper power source.
- Do not attempt to service the power adapter. There are no service parts inside. Replace the unit if it is damaged or exposed to excess moisture.

Care and cleaning

- Do not place the monitor face down on the floor or a desk surface directly. Otherwise, scratches on the panel surface may occur.
- The equipment is to be secured to the building structure before operation.
- (For models that support wall or ceiling mounting)
  - Install your monitor and monitor mounting kit on a wall with flat surface.
  - Ensure that the wall material and the standard wall mount bracket (purchased separately) are stable enough to support the weight of the monitor.
  - Turn off the monitor and the power before disconnecting the cables from the LCD monitor.

- Always unplug the product from the power outlet before cleaning. Clean the LCD monitor surface with a lint-free, non-abrasive cloth. Avoid using any liquid, aerosol or glass cleaners.
- Slots and openings on the back or top of the cabinet are for ventilation. They must not be blocked or covered. Your monitor should never be placed near or over a radiator or heat sources, or in a built-in installation unless proper ventilation is provided.
- Do not place heavy loads on the monitor to avoid possible personal injury or damage to the monitor.
- Consider keeping the box and packaging in storage for use in the future when you may need to transport the monitor.
- Refer to the product label for information on power rating, manufacture date, and identification markings.

Servicing

- Do not attempt to service this product yourself, as opening or removing covers may expose you to dangerous voltages or other risks. If any of the above mentioned misuse or other accident such as dropping or mishandling occurs, contact qualified service personnel for servicing.
- Contact your place of purchase or visit the local website from ZOWIE.BenQ.com for more support.

Caution

- The monitor should be 50 ~ 70 cm (20 ~ 28 inches) away from your eyes.
- Looking at the screen for an extended period of time causes eye fatigue and may deteriorate your eyesight. Rest your eyes for 5 ~ 10 minutes for every 1 hour of product use.
- Reduce your eye strain by focusing on objects far way.
- Frequent blinking and eye exercise help keep your eyes from drying out.

Typographics

Icon / Symbol	Item	Meaning
	Warning	Information mainly to prevent the damage to components, data, or personal injury caused by misuse and improper operation or behavior.
	Tip	Useful information for completing a task.
	Note	Supplementary information.

In this document, the steps needed to reach a menu may be shown in condensed form, for example: **Menu** > **System** > **Information**.

Table of Contents

Copyright 2

Product support 3

Getting started 8

Getting to know your monitor 10

Front view 10

Back view 10

Connections 11

How to assemble your monitor hardware 12

How to detach the stand and the base 17

Adjusting the monitor height 18

Viewing angle adjustment 19

Rotating the monitor 20

Installing the Shield (shading hood, XL2746K only) 22

Using the monitor wall mounting kit (purchased separately) 24

Getting the most from your monitor 25

Downloading the LCD Monitor driver files from the Internet 25

How to install the monitor on a new computer 26

How to upgrade the monitor on an existing computer 27

How to install on Windows 10 system 28

How to install on Windows 8 (8.1) system 29

How to install on Windows 7 system 30

How to adjust your monitor 31

The control panel 31

The S Switch 31

5-way controller and basic menu operations 33

Working with the Rotation Keys 34

Working with the **Quick Menu** 35

Adjusting display mode 37

Choosing an appropriate picture mode 37

Setting up your own game mode 37

Working with game mode to go by S Switch 38

Enabling color vision accessibility (**Color Weakness**) 38

Adjusting Dynamic Accuracy 38

Activating VESA standard DisplayPort Adaptive-Sync 39

Using **Scaling** 39

Initial setup for playing games at 165 / 240 Hz 39

Updating the firmware 40

Updating the startup screen 42
Navigating the main menu 44
Mode menu 45
Color menu 46
Picture menu 48
Save menu 50
Display menu 51
Custom menu 53
System menu 56
Troubleshooting 59
Frequently asked questions (FAQ) 59
Need more help? 60

Getting started

When unpacking please check you have the following items. If any are missing or damaged, please contact the place of purchase for a replacement.

LCD Monitor	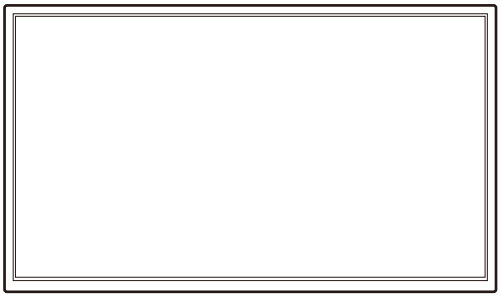
Monitor Stand	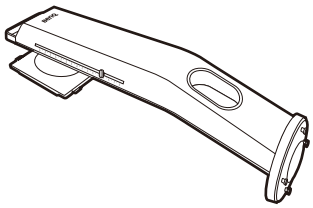
Monitor Base	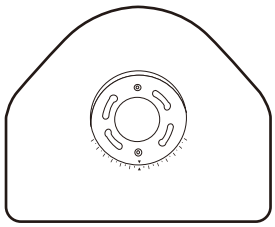
Quick Start Guide	
Safety Instructions	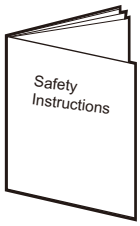
Regulatory Statements	

S Switch (Optional accessory for XL2731K) To find the compatible models, visit ZOWIE.BenQ.com for information on XS250.	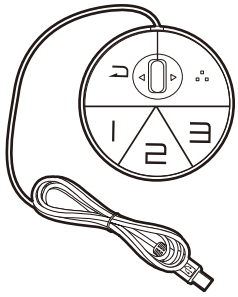
Shield (Shading hood) (XL2746K only)	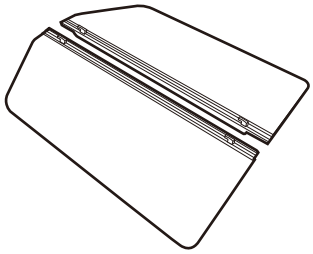
Power Cord (Supplied item may differ by model or region.)	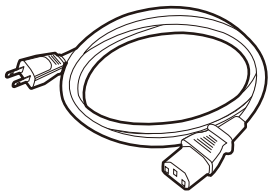
Video Cable: DP	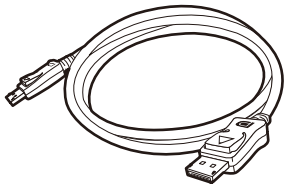
Dust cover (XL2746K only)	

- Available accessories and the pictures shown here may differ from the actual contents and the product supplied for your region. And the package contents may subject to change without prior notice. For cables that are not supplied with your product, you can purchase them separately.
- Consider keeping the box and packaging in storage for use in the future when you may need to transport the monitor. The fitted foam packing is ideal for protecting the monitor during transport.

Always keep the product and accessories out of reach of small children.

Getting to know your monitor

Front view

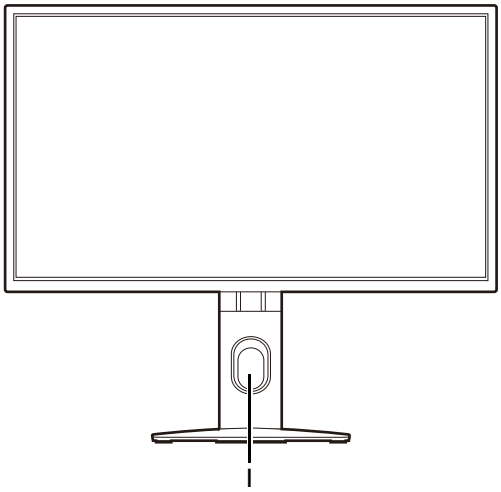

1. Cable management hole

Back view

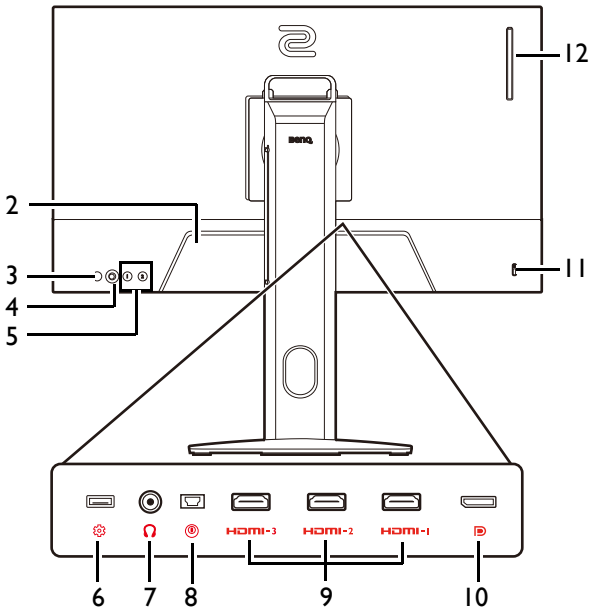

2. AC power input jack
3. Power button
4. 5-way controller
5. Rotation keys
6. USB port (for firmware update only)
7. Headphone jack
8. S Switch socket
9. HDMI (2.0) sockets
10. DisplayPort socket
11. Kensington lock slot
12. Headphone hook

- Above diagram may vary depending on the model.
- Picture may differ from product supplied for your region.
- HDMI 2.0 only works with compatible graphic cards and devices. Compatible issue may occur when the HDMI 2.0 input port conducts with a HDMI 1.4 output port.

Connections

The following connection illustrations are for your reference only. For cables that are not supplied with your product, you can purchase them separately.

For detailed connection methods, see page 14.

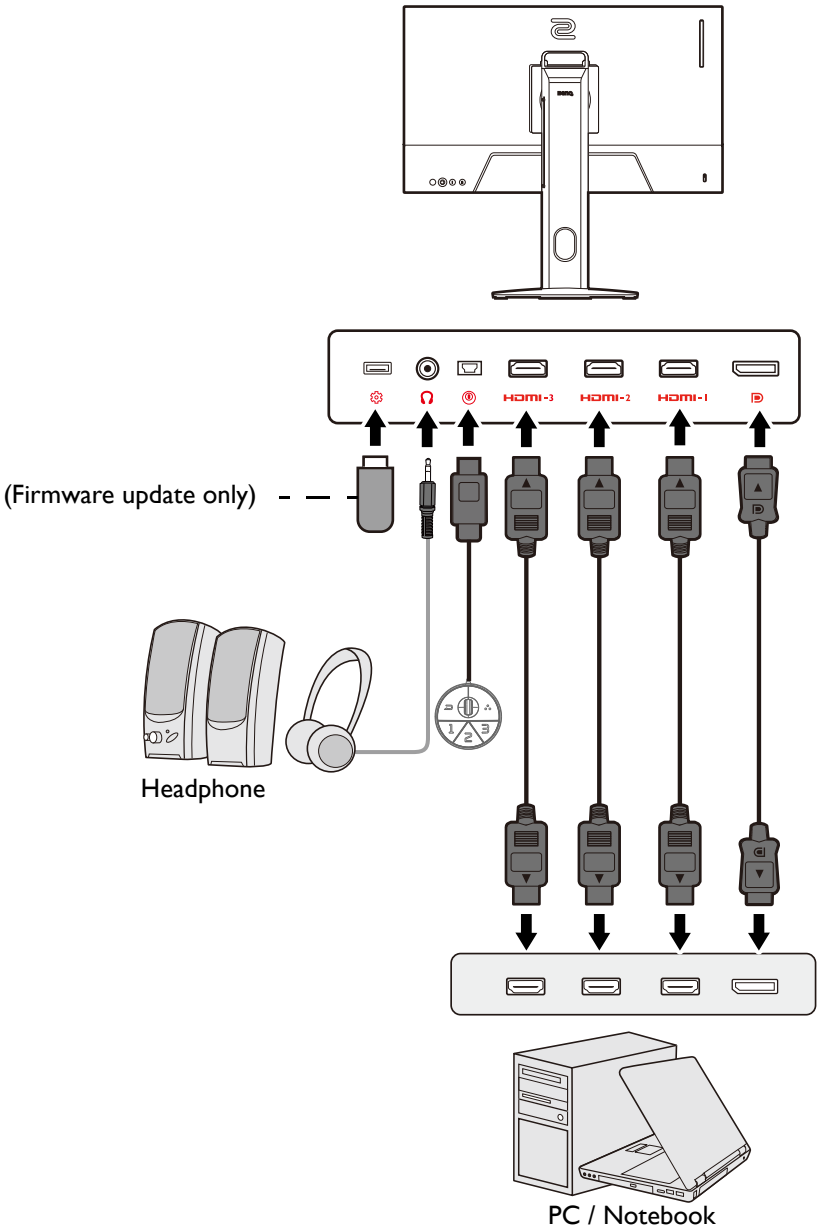

How to assemble your monitor hardware

- If the computer is turned on you must turn it off before continuing.
  Do not plug-in or turn-on the power to the monitor until instructed to do so.
- The following illustrations are for your reference only. Available input and output jacks may vary depending on the purchased model.
- Avoid finger pressure on the screen surface.

1. Attach the monitor base.

Please be careful to prevent damage to the monitor. Placing the screen surface on an object like a stapler or a mouse will crack the glass or damage the LCD substrate voiding your warranty. Sliding or scraping the monitor around on your desk will scratch or damage the monitor surround and controls.

Protect the monitor and screen by clearing a flat open area on your desk and placing a soft item like the monitor packaging bag on the desk for padding.

Gently lay the screen face down on a flat clean padded surface.

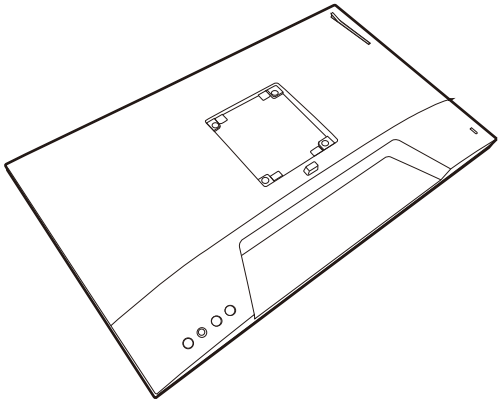

Orient and align the stand base socket with the end of the stand arm. Make sure to align the arrow on the end of the stand to the one on the monitor base.

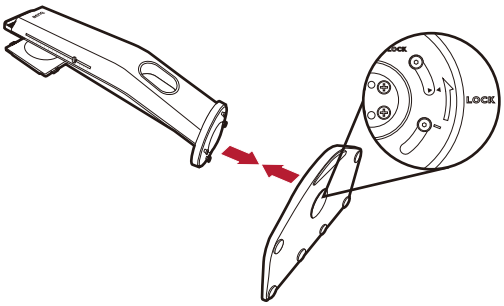

Turn the base counterclockwise until you cannot go further.

As illustrated, when the stand and the base are locked, the arrow on the end of the stand is aligned to the lock symbol on the monitor stand.

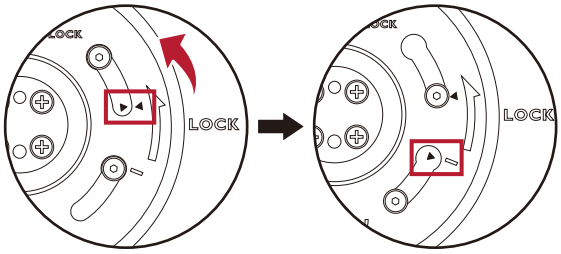

Raise the thumbscrew lids and tighten the thumbscrews as illustrated. Then push the lids back.

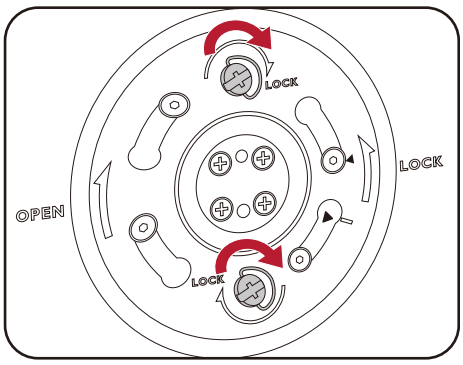

Orient and align the stand arm with the monitor, then push them together until they click and lock into place.

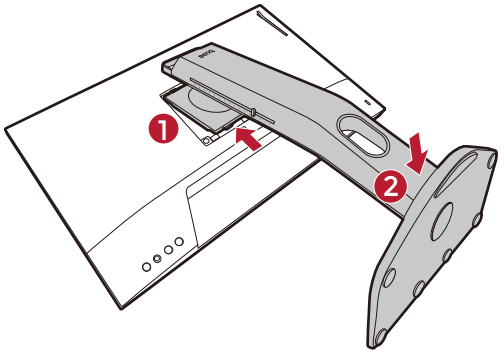

Carefully lift the monitor, turn it over and place it upright on its stand on a flat even surface.

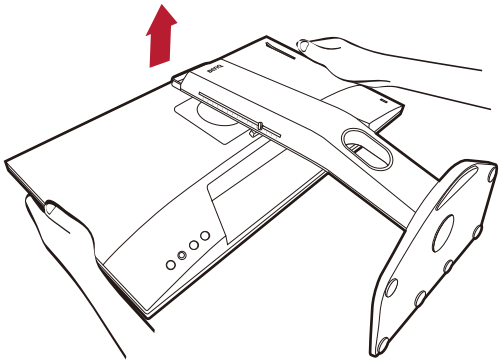

To move the monitor, you must hold the handle and the bottom of the stand base at the same time as illustrated. You can protect the monitor using the supplied dust cover.

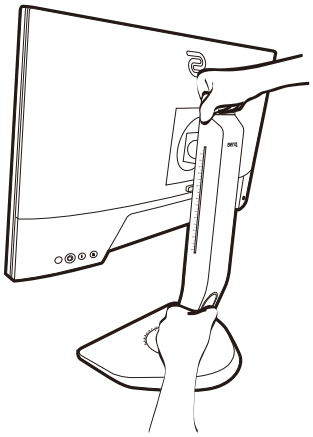

You might want to adjust the monitor stand height. See Adjusting the monitor height on page 18 for more information.

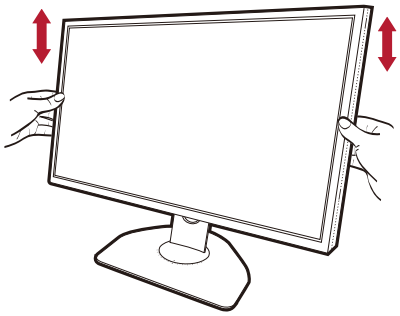

You should position the monitor and angle the screen to minimize unwanted reflections from other light sources.

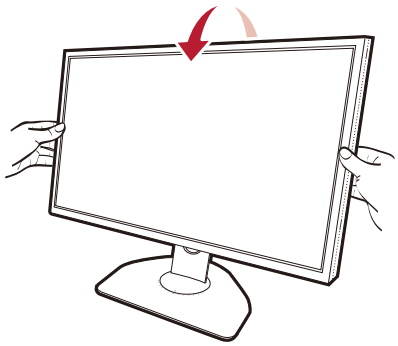

2. Connect the video cable.

The video cables included in your package and the socket illustrations in this document may vary depending on the product supplied for your region.

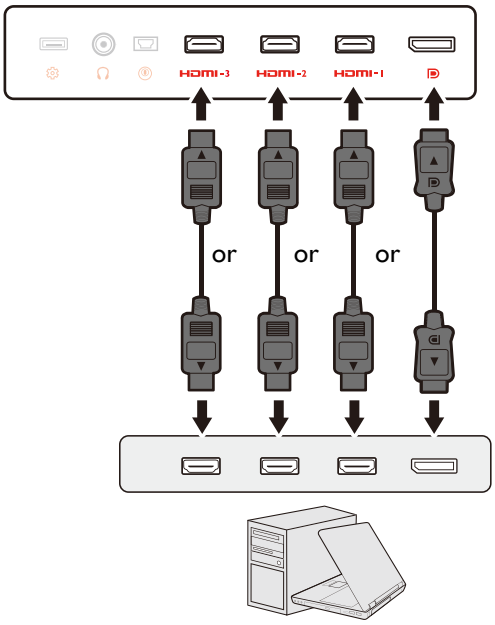

- Connect the plug of the HDMI cable to the HDMI port on the monitor. Connect the other end of the cable to the HDMI port of a digital output device.
- Connect the plug of the DP cable to the monitor video socket. Connect the other end of the cable to the computer video socket.

3. Connect the S Switch to the monitor.

Connect the S Switch to the S Switch socket found on the back of the monitor.

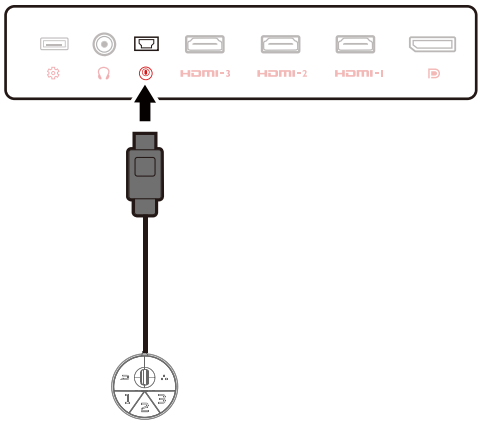

4. Connect the headset.

Connect the headphone connector of your headset to the headset jack found on the rear of the monitor.

You may connect headphones to the headphone jack found on the back side of the monitor.

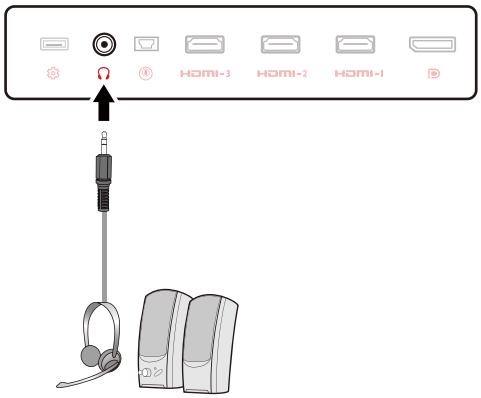

5. Using the headphone hook.

Pull out the headphone hook found on the back of the monitor. Leave your headset on the headphone hook if needed. Excessive force on the hook is prohibited.

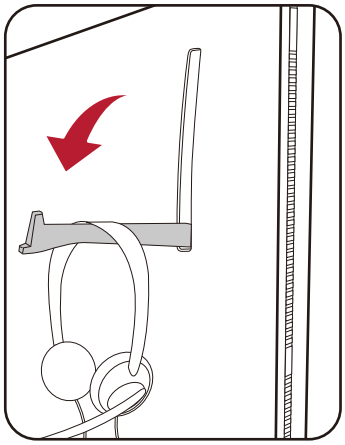

The maximum load capacity of the headphone hook is 400g.

6. Connect the power cable to the monitor.

Plug one end of the power cord into the socket labelled ~ on the rear of the monitor. Do not connect the other end to a power outlet just yet.

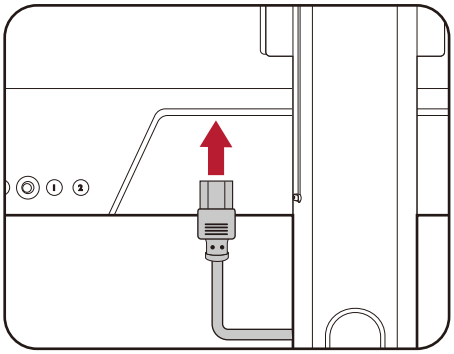

7. Organize the cables.

Allow enough cable length while cabling to avoid loose connection and to save the pins or socket connectors from being bent or broken.

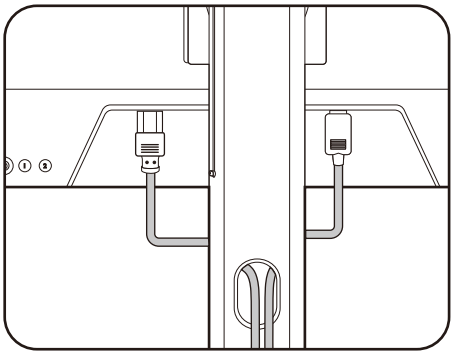

8. Connect-to and turn-on the power.

Plug the other end of the power cord into a power outlet and turn it on.

Picture may differ from product supplied for your region.

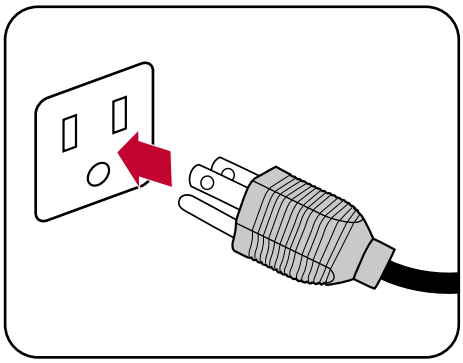

Turn on the monitor by pressing the power button on the monitor.

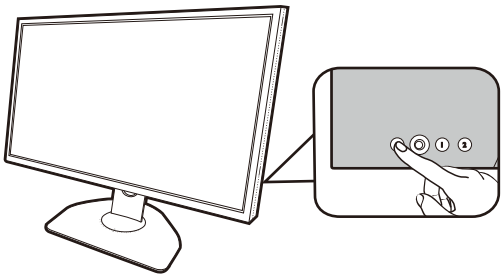

Turn on the computer too. If you have multiple video sources, press the Rotation key 2 and the 5-way controller to select an input source.

Follow the instructions in Getting the most from your monitor on page 25 to install the monitor software. If you are prompted by any OSD message, follow the on-screen instructions to proceed.

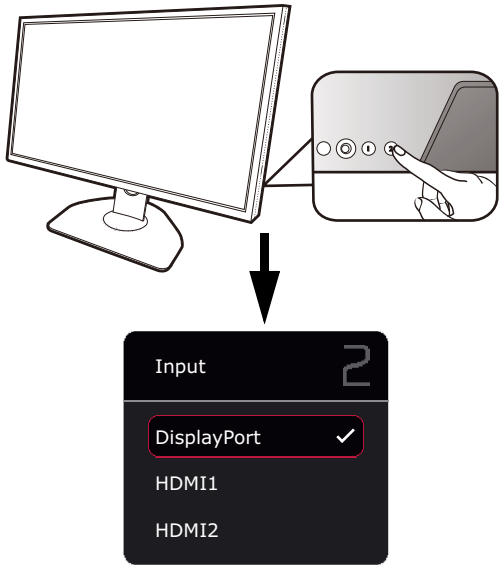

To extend the service life of the product, we recommend that you use your computer's power management function.

9. Read the mode change notice. (Available by region.)

The monitor is set to a specific mode by default to keep low power consumption and meet the international energy standards.

Any change to the default display settings may consume more power. Select **CONFIRM** to change modes, or select **CANCEL** to keep the default settings.

10. Change the display language.

If you want to change the display language, go to **System** > **Language** . See Language on page 57 for details.

How to detach the stand and the base

1. Prepare the monitor and area.

Turn off the monitor and the power before unplugging the power cable. Turn off the computer before unplugging the monitor signal cable.

Protect the monitor and screen by clearing a flat open area on your desk and placing a soft item like a towel on the desk for padding, before laying the screen face down on a flat clean padded surface.

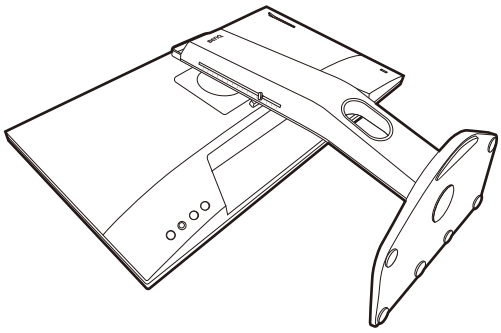

Please be careful to prevent damage to the monitor. Placing the screen surface on an object like a stapler or a mouse will crack the glass or damage the LCD substrate voiding your warranty. Sliding or scraping the monitor around on your desk will scratch or damage the monitor surround and controls.

2. Remove the monitor stand.

While pressing and holding the VESA mount release button (❶), detach the stand from the monitor (❷ and ❸).

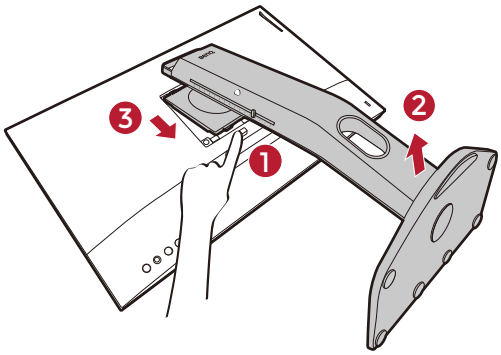

3. Remove the monitor base.

Raise the thumbscrew lids and release the thumbscrews as illustrated.

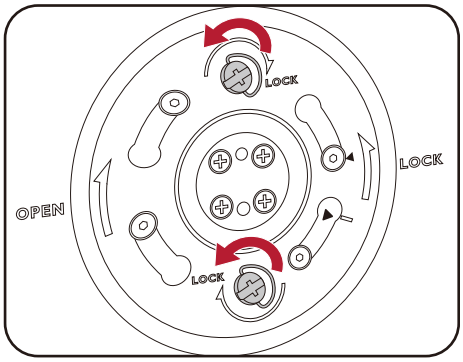

In case you intend to use your monitor on the stand in the future, please keep the monitor base and monitor stand somewhere safe for future use.

Turn the base clockwise until you cannot go further.

As illustrated, when the stand and the base are unlocked, the arrow on the end of the stand is aligned to the arrow on the monitor base.

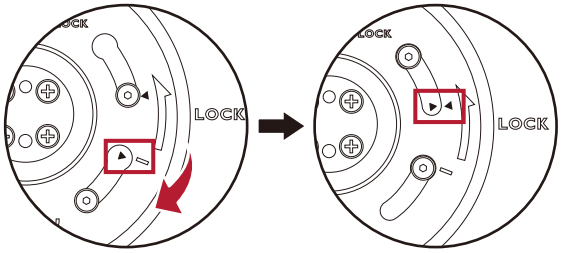

And then detach the base from the stand.

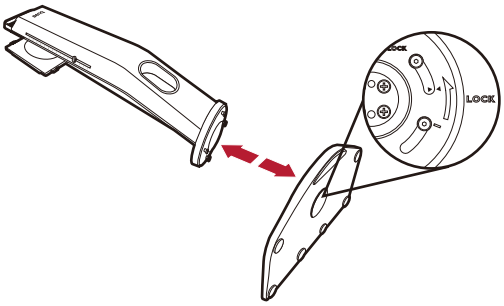

Adjusting the monitor height

1. To adjust the monitor height, hold both the left and the right sides of the monitor to lower the monitor or lift it up to the desired height.

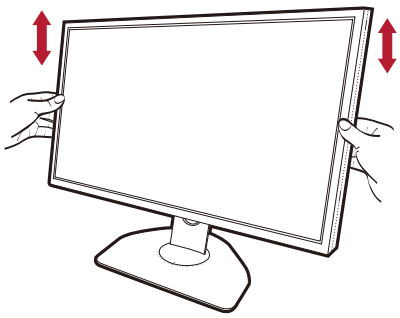

2. On the monitor stand is an adjustment scale that helps keep track of your preferred monitor height. Move the marker on the scale to the monitor stand height just set.

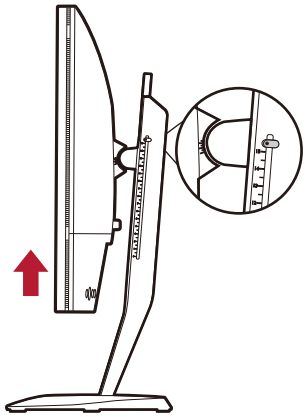

Avoid placing hands on the upper or lower part of the height-adjustable stand or at the bottom of the monitor, as ascending or descending monitor might cause personal injuries. Never place your hand on the stand either when tilting the monitor upward or downward. Keep children out of reach of the monitor while performing this operation.

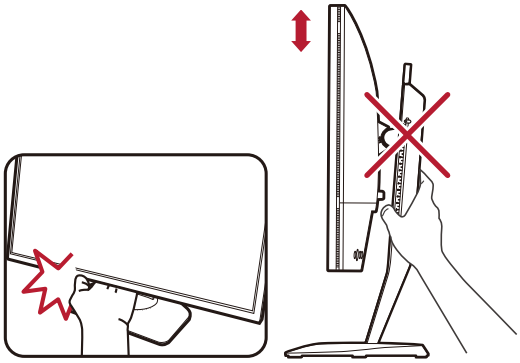

Viewing angle adjustment

You may position the screen to the desired angle with the monitor tilt, swivel, and height adjustment functions. Check the product specifications on the website for details.

Tilting the monitor

Tilt the monitor gently. The scale on top of the column helps keep track of your preferred tilt angle.

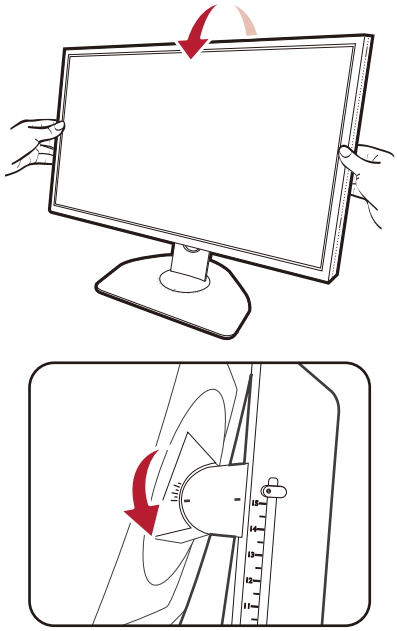

Swiveling the monitor

1. Turn the monitor to the left or right as desired.
2. Turn the adjustment scale on the monitor base. The interval of measurement is 5 degrees, and you can make adjustment within the possible swivel angle. The scale on the monitor base helps to keep track of your preferred swivel angle.

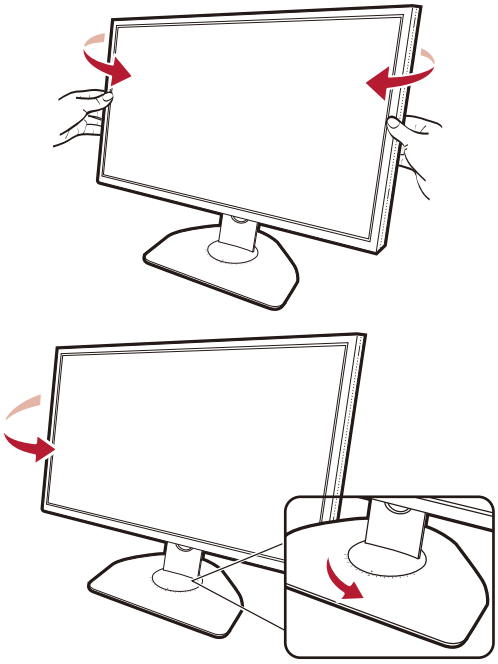

Rotating the monitor

1. Pivot the display.

Before rotating the monitor with a portrait viewing orientation, the display has to be rotated 90 degrees.

Right-click the desktop and select **Screen resolution** from the popup menu. Select **Portrait** in **Orientation**, and apply the setting.

Depending on the operating system on your PC, different procedures should be followed to adjust the screen orientation. Refer to the help document of your operating system for details.

2. Fully extend the monitor and tilt it.

Gently lift the display up and extend it to the maximum extended position. Then tilt the monitor.

The monitor should be vertically extended to allow to rotate from landscape to portrait mode.

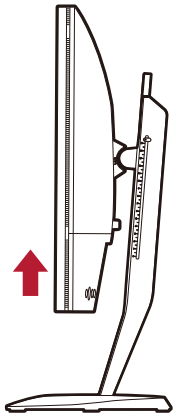

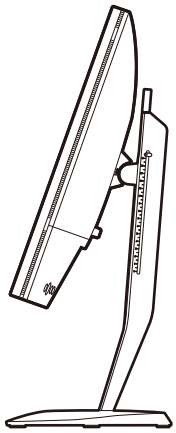

3. Rotate the monitor 90 degrees clockwise as illustrated.

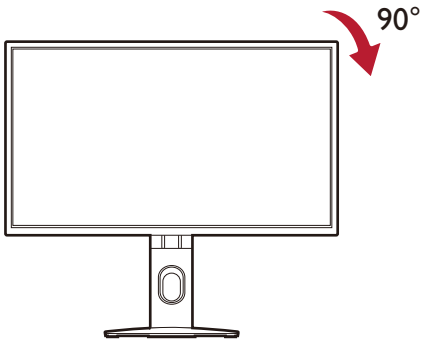

To avoid the edge of the LCD display hitting the monitor base surface while it is being rotated, do tilt and extend the monitor to the highest position before you start to rotate the display. You should also make sure there are no obstacles around the monitor and there is enough room for cables.

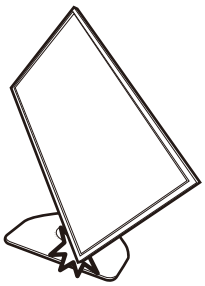

4. Adjust the monitor to the desired viewing angle. See Viewing angle adjustment on page 19 for more information.

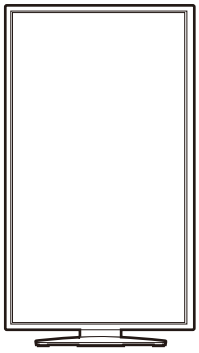

If the monitor has been rotated to portrait mode and height adjustment is desired, you should be noted that the wide screen will keep the monitor from being lowered to its minimum height.

Installing the Shield (shading hood, XL2746K only)

To help focusing in games, the Shield (shading hood) avoids the unwanted disturbance interfered with the peripheral vision while playing.

For models that came with shading hoods, two shading hoods are inside the accessory box. Please be careful to prevent damage to the Shield and the monitor. The shading hoods are well-designed and can fit into your monitor properly. Do not use excessive force when installing Shield to avoid possible damage.

1. Prepare for the shield installation.

   Place the monitor upright on its stand on a flat even surface. Make sure the monitor is rotated to the landscape mode.

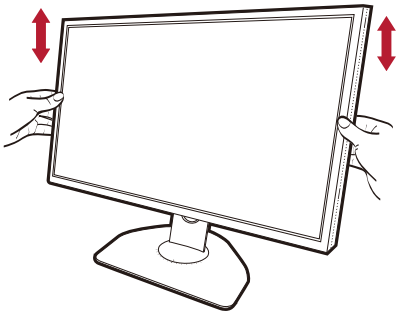

2. Remove the stickers and the rubbers on both sides of the monitor.

   There are 2 holes protected by rubbers and stickers on each of the right and the left side of the monitor. Remove the stickers and the rubbers before shading hood installation.

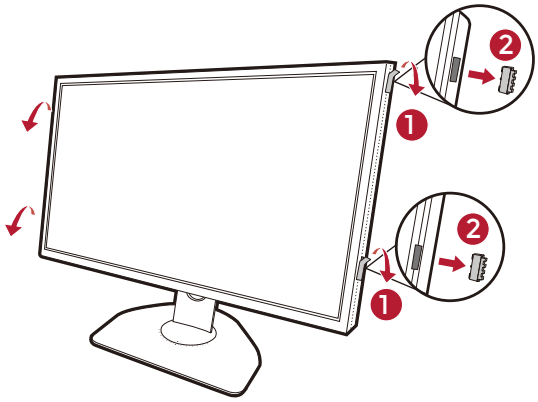

Keep the rubbers and insert them back to the holes if Shield has been removed.

3. Attach the Shield to the monitor.

   Two shading hoods are not identical. The logo should be facing outward on the upper section.

   Attaching the hoods by aligning the hooks to the holes on both sides of the monitor. Once the hooks are aligned properly, hold the bottom of the monitor as illustrated to keep it stable, and slide down the hood and the hooks will be locked into place.

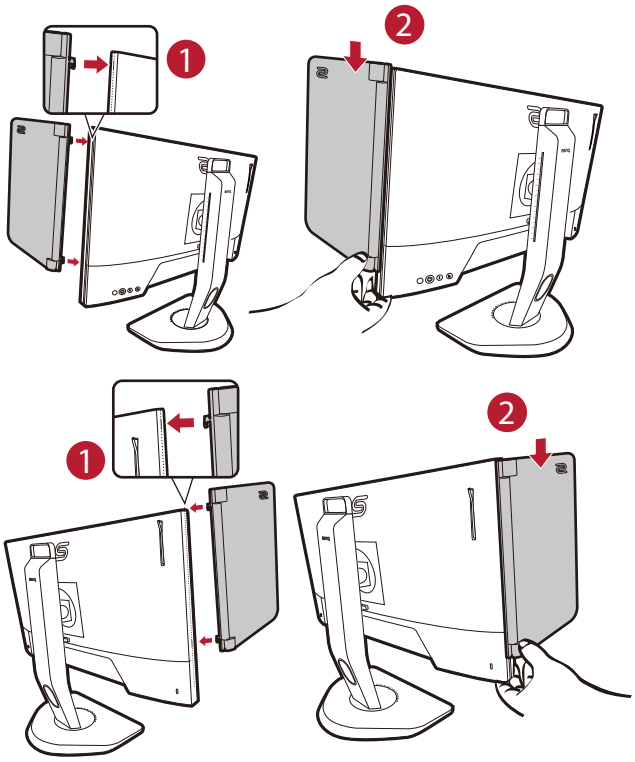

4. Adjust the hoods to the desired angle.

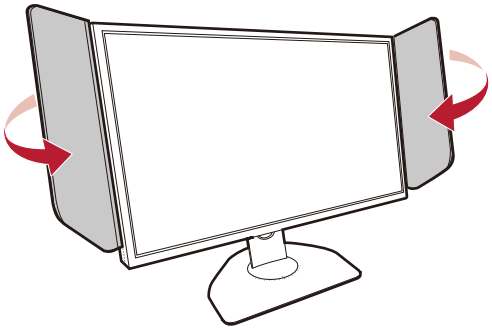

Uninstalling the Shield

Please remove the hoods before moving the monitor to different places.

1. Detach the Shield.

   Hold the top of the monitor as illustrated to keep it stable. Lift the hoods upward and detach them carefully.

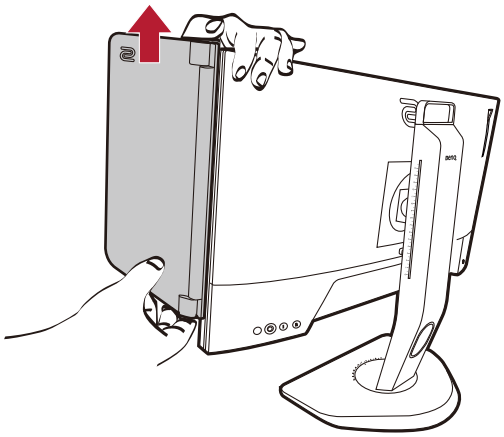

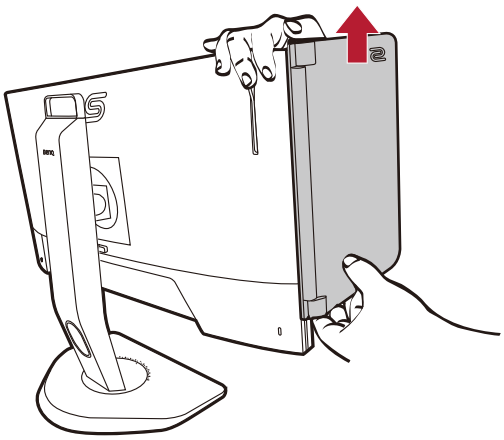

2. Insert the rubbers back into the holes.

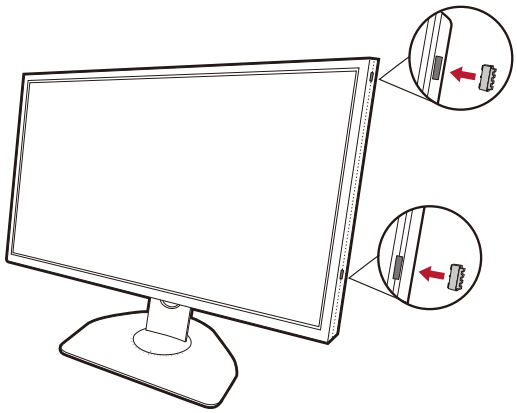

Using the monitor wall mounting kit (purchased separately)

The back of your LCD monitor has a VESA standard mount with 100mm pattern, allowing the installation of a wall mount bracket. Before starting to install a monitor wall mounting kit, please read the precautions carefully.

Precautions

- Install your monitor and monitor mounting kit on a wall with flat surface.
- Ensure that the wall material and the standard wall mount bracket (purchased separately) are stable enough to support the weight of the monitor. Refer to the product specifications on the website for weight information.
- Turn off the monitor and the power before disconnecting the cables from the LCD monitor.

1. Remove the monitor stand.

   Lay the screen face down on a clean and well-padded surface. Detach the monitor stand as instructed in step 1~2 in How to detach the stand and the base on page 17.

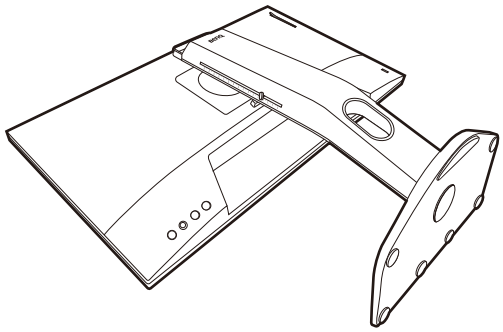

2. Remove the screws on the back cover.

   Use a cross-pointed screwdriver to release the screws on the back cover. The use of a magnetic-head screwdriver is recommended to avoid of losing the screws.

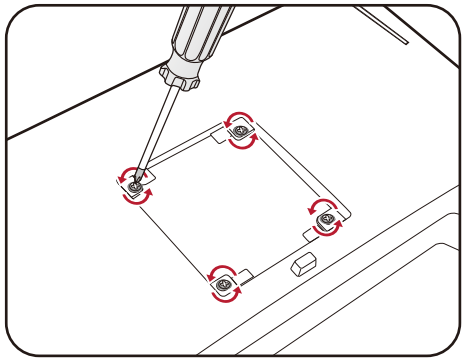

In case you intend to use your monitor on the stand in the future, please keep the monitor base, monitor stand, and screws somewhere safe for future use.

3. Follow the instruction manuals of the wall mount bracket you purchased to complete the installation.

Use four M4 x 10 mm screws to fix a VESA standard wall mount bracket to the monitor. Make sure that all screws are tightened and secured properly. Consult a professional technician or BenQ service for wall mount installation and safety precautions.

Getting the most from your monitor

To gain the most benefit from your new LCD monitor, you should install the custom LCD Monitor driver software as provided on the local website. See Downloading the LCD Monitor driver files from the Internet on page 25 for details.

The circumstances under which you connect and install your LCD Monitor will determine which process you need to follow to successfully install the LCD Monitor driver software. These circumstances relate to which version of Microsoft Windows you are using, and whether you are connecting the monitor and installing the software onto a new computer (without existing monitor driver software), or whether you are upgrading an existing installation (which already has existing monitor driver software) with a newer monitor.

In either case however, the very next time you turn on your computer (after connecting the monitor to your computer), Windows will automatically recognize the new (or different) hardware, and will launch its **Found New Hardware wizard**.

Follow the wizard instructions. Further details and step-by-step instructions for either an automatic (new) or upgrade (existing) installation, see:

- How to install the monitor on a new computer on page 26.
- How to upgrade the monitor on an existing computer on page 27.

- If you require a User Name and Password to login to your Windows computer, you must be logged on as an Administrator or as a member of the Administrators group in order to install the monitor driver software. Furthermore, if your computer is connected to a network which has security access requirements, network policy settings may prevent you from installing software on your computer.
- To check the name of the purchased model, refer to the specification label on the back of the monitor.

Downloading the LCD Monitor driver files from the Internet

1. Download the correct driver files from ZOWIE.BenQ.com > **Support** > **Download & FAQ** > model name > **Driver**.
2. On your computer, have your driver files extracted into an empty folder. Remember the file location the files are extracted to.

How to install the monitor on a new computer

This instruction details the procedure for selecting and installing the LCD Monitor driver software on a new computer which has never had a monitor driver installed before. This instruction is only suitable for a computer which has never been used before, and for which the LCD Monitor is the first ever monitor to be connected to it.

If you are adding the LCD Monitor to an existing computer that has already had another monitor connected to it (and has monitor driver software installed), you should not be following these instructions. You should instead be following the instructions for How to upgrade the monitor on an existing computer.

1. Follow the instructions in How to assemble your monitor hardware on page 12.

   When Windows starts, it will automatically detect the new monitor and launch the **Found New Hardware Wizard**. Follow the prompts until it displays the option to **Install Hardware Device Drivers**.

2. Check **Search for a suitable driver for my device** option, and click **Next**.
3. Look to confirm that the wizard has selected the correct name of your monitor and click **Next**.
4. Click **Finish**.
5. Restart the computer.

How to upgrade the monitor on an existing computer

This instruction details the procedure for manually updating the existing monitor driver software on your Microsoft Windows computer. It is currently tested as compatible for Windows 10, Windows 8 (8.1), and Windows 7 Operating System (OS).

The LCD Monitor driver for your model may well function perfectly with other versions of Windows, however, as at the time of writing, BenQ has done no testing of this driver on other versions of Windows and cannot guarantee its operation on those systems.

Installing monitor driver software involves selecting an appropriate information file (.inf) from the downloaded driver files for the particular model monitor you have connected, and letting Windows install the corresponding driver files. You need only steer it in the right direction. Windows has an Upgrade Device Driver Wizard to automate the task and guide you through the file selection and installation process.

See:

- How to install on Windows 10 system on page 28
- How to install on Windows 8 (8.1) system on page 29
- How to install on Windows 7 system on page 30.

How to install on Windows 10 system

1. Open **Display Properties**.

   Go to **Start**, **Settings**, **Devices**, **Devices and Printers** and right-click the name of your monitor from the menu.

2. Select **Properties** from the menu.
3. Click the **Hardware** tab.
4. Click **Generic PnP Monitor**, and then the **Properties** button.
5. Click the **Driver** tab and the **Update Driver** button.
6. In the **Update Driver Software** window, select the option **Browse my computer for driver software**.
7. Click **Browse** and locate the driver files downloaded from the Internet as instructed in Downloading the LCD Monitor driver files from the Internet on page 25.
8. Click **Close**.

   You may be prompted to restart your computer after the driver update is complete.

How to install on Windows 8 (8.1) system

1. Open **Display Properties**.

   Move the cursor to the lower-right of the screen or press the **Windows** + **C** buttons on the keyboard to bring up the **Charm** bar. Go to **Settings**, **Control Panel**, **Devices and Printers** and right-click the name of your monitor from the menu.

   Alternatively, right-click the desktop and select **Personalize**, **Display**, **Devices and Printers**, and right-click the name of your monitor from the menu.

2. Select **Properties** from the menu.
3. Click the **Hardware** tab.
4. Click **Generic PnP Monitor**, and then the **Properties** button.
5. Click the **Driver** tab and the **Update Driver** button.
6. In the **Update Driver Software** window, select the option **Browse my computer for driver software**.
7. Click **Browse** and locate the driver files downloaded from the Internet as instructed in Downloading the LCD Monitor driver files from the Internet on page 25.
8. Click **Close**.

   You may be prompted to restart your computer after the driver update is complete.

How to install on Windows 7 system

1. Open **Display Properties**.

   Go to **Start**, **Control Panel, Hardware and Sound, Devices and Printers** and right-click the name of your monitor from the menu.

   Alternatively, right-click the desktop and select **Personalize**, **Display**, **Devices and Printers**, and right-click the name of your monitor from the menu.

2. Select **Properties** from the menu.
3. Click the **Hardware** tab.
4. Click **Generic PnP Monitor**, and then the **Properties** button.
5. Click the **Driver** tab and the **Update Driver** button.
6. In the **Update Driver Software** window, select the option **Browse my computer for driver software**.
7. Click **Browse** and locate the driver files downloaded from the Internet as instructed in Downloading the LCD Monitor driver files from the Internet on page 25.
8. Click **Close**.

   You may be prompted to restart your computer after the driver update is complete.

How to adjust your monitor

The control panel

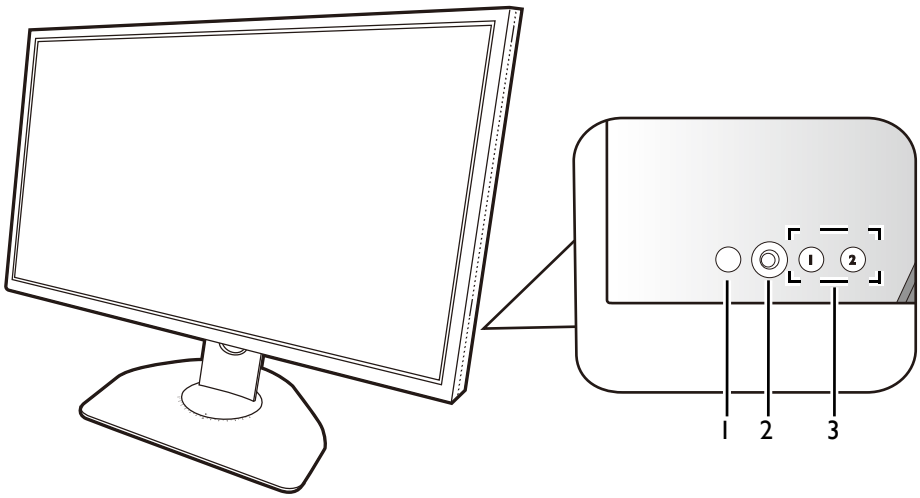

No.	Name	Description
1.	Power key	Turns the power on or off.
2.	5-way controller	Accesses the functions or menu items as instructed by the on-screen icons. See 5-way controller and basic menu operations on page 33 for more information.
3.	Rotation keys	Accesses the functions or menu items displayed on the screen. See Working with the Rotation Keys on page 34 for more information.

The S Switch

Apart from the control keys, S Switch also provides a quick way to control and access the OSD menus.

You need to connect the S Switch to your monitor prior to use. Follow the instructions in Connect the S Switch to the monitor. on page 14.

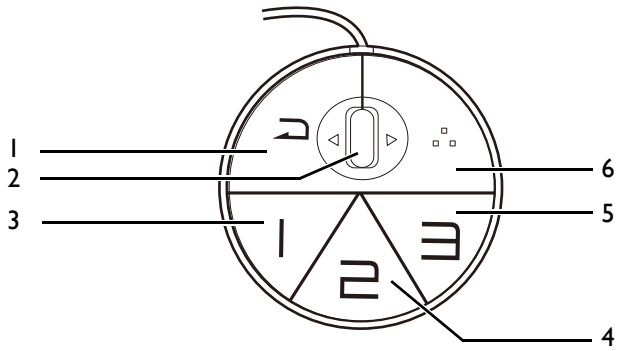

No.	Name	Function
1.	Return button	• Returns to the previous menu. • Exits OSD menu. • Press and hold for 3 seconds close the current menu.

No.	Name	Function
2.	Wheel	• Scroll up: works the same with . • Scroll down: works the same with . • Tilt right: works the same with . • Tilt left: works the same with . • Selects menu item by pressing once.
3.	Gamer 1 button	• Press to switch to **Gamer1** (**Mode**). • Press and hold for 3 seconds to save the customized display settings for **Gamer1** on S Switch. For advanced functions, see Copying game modes from an S Switch to your monitor on page 38 for more information.
4.	Gamer 2 button	• Press to switch to **Gamer2** (**Mode**). • Press and hold for 3 seconds to save the customized display settings for **Gamer2** on S Switch. For advanced functions, see Copying game modes from an S Switch to your monitor on page 38 for more information.
5.	Gamer 3 button	• Press to switch to **Gamer3** (**Mode**). • Press and hold for 3 seconds to save the customized display settings for **Gamer3** on S Switch. For advanced functions, see Copying game modes from an S Switch to your monitor on page 38 for more information.
6.	S Switch key	By default, the key is the hot key for **Input**. To change the default settings, go to **Custom** > **S Switch Key**. See S Switch Key on page 55 for more information.

S Switch is designed for specific models exclusively. Do not connect it to other devices with USB ports. To find the compatible models, visit ZOWIE.BenQ.com for information on XS250.

5-way controller and basic menu operations

The 5-way controller is located at the rear of the monitor. While sitting in front of the monitor, move the controller to the directions instructed by the on-screen icons for menu navigation and operations.

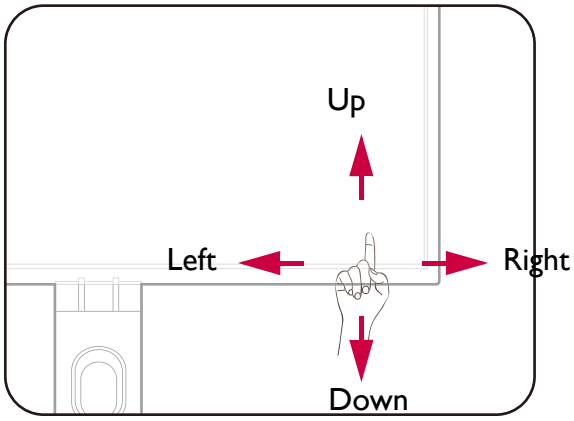

OSD icon	5-way controller operation	Function
(With an available video input but no menu has been activated)		
N/A	Press	Activates the **Quick Menu**.
(When the **Quick Menu** has been activated)		
	Move to the left / right	Goes to the previous / next menu setting.
	Move up / down	• Goes to the previous / next menu item. • For increase / decrease adjustment.
	Press center	Confirms the selection.
(When the main menu has been activated)		
	Press center	Confirms the selection.
	Move to the right	• Enters sub menus. • Confirms the selection.
	Move up	• Goes to the previous menu item. • For up / increase adjustment.
	Move down	• Goes to the next menu item. • For down / decrease adjustment.
	Move to the left	• Returns to the previous menu. • Exits OSD menu.

All OSD (On Screen Display) menus can be accessed by the control keys. You can use the OSD menu to adjust all the settings on your monitor. Available menu options may vary depending on the input sources, functions and settings.

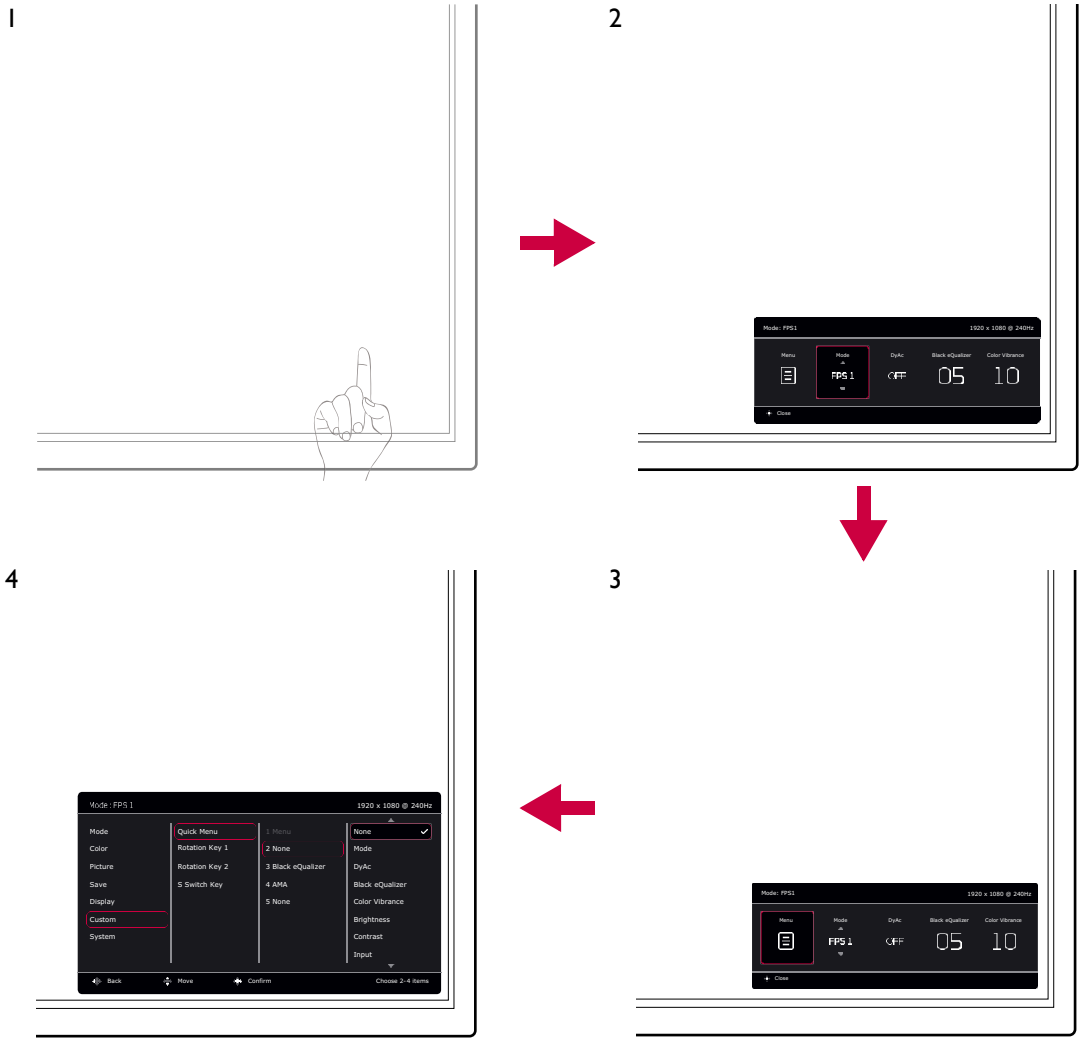

1. Press the 5-way controller.
2. The **Quick Menu** is displayed.
3. Select **Menu** to access the main menu.
4. On the main menu, follow the on-screen icons on the bottom of the menu to make adjustments or selection. See Navigating the main menu on page 44 for details on the menu options.

Working with the Rotation Keys

The Rotation Keys (located next to the 5-way controller) perform as hot keys to provide direct access to pre-defined functions. You can change the default setting and designate different functions for these keys.

Accessing the Rotation Key functions

1. Press the key with the desired function on the rear of the monitor.

2. Press the same key repeatedly to cycle through available options on the list.

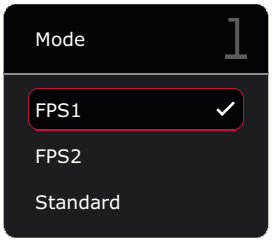

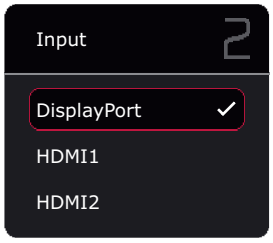

Item	Description
Rotation Key 1	Switches to a list of **Mode** options by default. To change the default settings, see Customizing the Rotation Keys on page 35.
Rotation Key 2	Switches to a list of **Input** options by default. To change the default settings, see Customizing the Rotation Keys on page 35.

Customizing the Rotation Keys

1. Press the 5-way controller to bring up the **Quick Menu**.
2. Go to **Menu** > **Custom** > **Rotation Key 1** or **Rotation Key 2**.
3. On the sub menu, select a category.
4. Under the category, check to select up to 3 items for quick access by this key. If 3 items have been selected and a change is preferred, deselect one so all items are available for selection again.

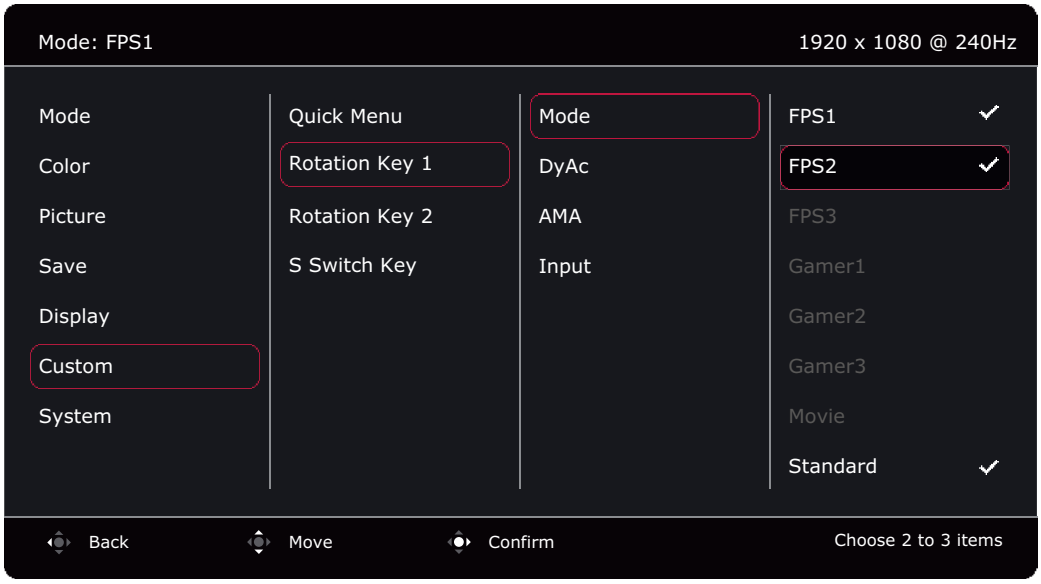

Working with the **Quick Menu**

The **Quick Menu** is a quick access to some monitor settings frequently adjusted. It also provides the access to the main menu.

- Press the 5-way controller to bring up the **Quick Menu**
- Press / to different settings.
- Press / to cycle through menu options / make adjustments.

• Go to **Menu** and press to access the main menu.

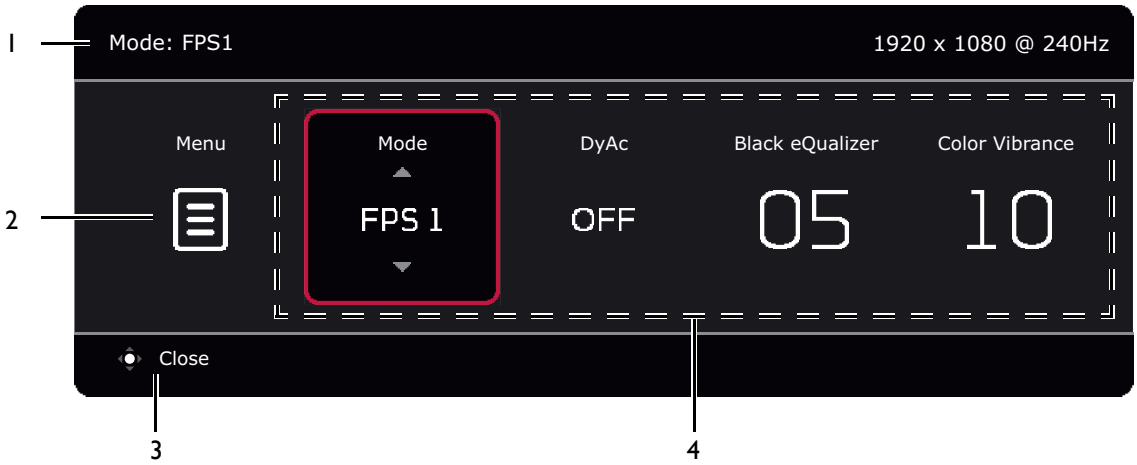

No.	Item	Description
1	System information	Displays current system information, including resolution, refresh rate, and picture mode.
2	Main menu	Accesses the main menu. See Navigating the main menu on page 44 for more information.
3	On-screen instructions	Operation tips.
4	Quick settings	To customize the setting menus that can be accessed from the **Quick Menu**, see Customizing the Quick Menu on page 36.

Customizing the **Quick Menu**

By default, there are 4 settings that could be customized and quickly adjusted from the **Quick Menu**. Change the settings if desired.

1. Press the 5-way controller bring up the **Quick Menu**.
2. Go to **Menu** > **Custom** > **Quick Menu**.
3. The first item is grayed out and cannot be changed. Select one available item and press for further selection.
4. Scroll to one item and press / for confirmation. If you prefer to keep a short **Quick Menu**, select **None** for a setting so it will not be displayed on the **Quick Menu**. Do not choose the same item for 2 settings or choose **None** for more than 2 settings. A setting menu is grayed out on the **Quick Menu** if it is not supported by a picture mode.

5. After the setting is done, press to return to **Quick Menu** to save properly.

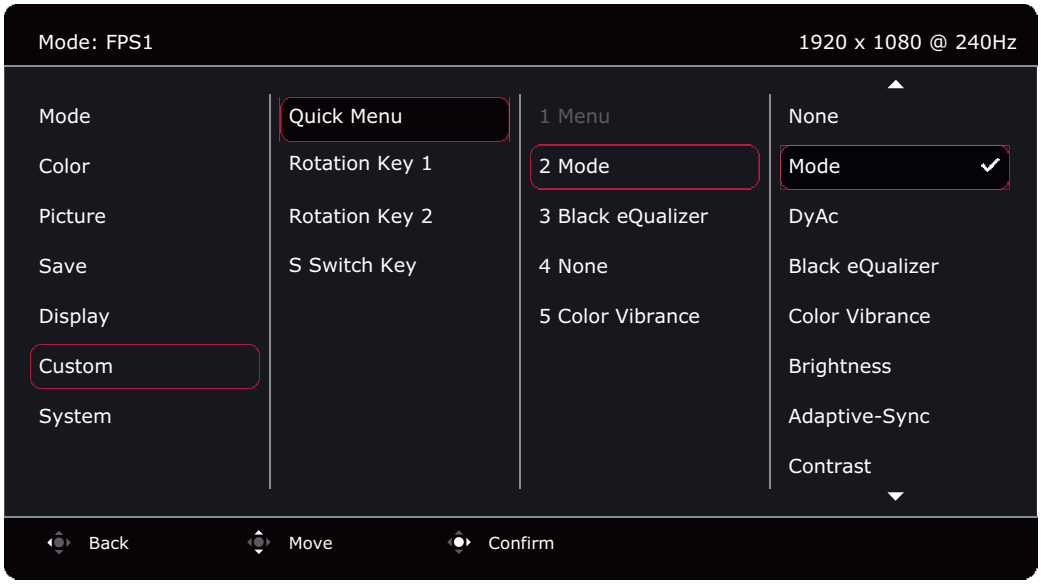

Adjusting display mode

To display images of aspect ratio other than 16:9 and size other than the panel size of your purchased model, you can adjust the display mode on the monitor. See Display Mode on page 51 for all the available options.

1. Press the 5-way controller to bring up the **Quick Menu**.
2. Go to **Menu** > **Display** > **Display Mode**.
3. Select an appropriate display mode. The setting will take effect immediately.

Choosing an appropriate picture mode

Your monitor provides various picture modes that are suitable for different types of images. Display settings can be saved by picture mode. See Mode menu on page 45 for all the available options.

1. Press the 5-way controller to bring up the **Quick Menu**.
2. Go to **Menu** > **Mode**.
3. Select an appropriate picture mode. The setting will take effect immediately.

Setting up your own game mode

There are several preset picture modes on your monitor that are suitable for games. To better suit your needs, you can change and save the related display settings, and switch to your own game mode easily.

Do not plug or unplug S Switch while configuring game mode settings.

1. Press the 5-way controller to bring up the **Quick Menu**.
2. Make sure the **Auto Save** function is enabled from **Menu** > **Save** > **Auto Save**.
3. Adjust the related available settings in different OSD menus.
4. The customized settings are applied and saved automatically to the current mode.
5. Alternatively, go to **Menu** > **Save** > **Save to** and save your preferences to a game mode (**Gamer1** / **Gamer2** / **Gamer3**) to the monitor. If you want to switch to your game mode at any time, go to **Mode** and select the game mode with the new settings to apply.

If **Auto Save** is disabled, you need to go to **Save** > **Save Settings** to save the settings manually to the current mode after display adjustment.

Working with game mode to go by S Switch

Once the adjusted display settings have been saved to S Switch, you can take the settings with you to other LCD monitors with the same model name. It is driver-free and helps apply new game modes quickly.

Saving your game modes to S Switch

By default, the settings for game mode buttons (labeled 1~3) on S Switch are identical to the game modes (**Gamer1** / **Gamer2** / **Gamer3**) in **Mode** on your monitor. You can change the setting as desired.

1. Adjust to the personal preference in monitor menu.
2. Press and hold one of the game mode buttons (labeled 1~3) on S Switch for 3 seconds to save the customized settings. The game mode is now saved on S Switch and is ready to go.

This is the only way to save the monitor settings to the Gamer 1/2/3/ buttons on S Switch. Changes to the game mode settings from the monitor OSD menu are not synced with the game mode settings on S Switch without this operation.

Copying game modes from an S Switch to your monitor

Apart from the default and the adjusted settings done on your monitor, you can quickly import settings from other monitors with the same model name via S Switch.

1. Make sure the **Auto Save** function is enabled from **Menu** > **Save** > **Auto Save**.
2. Plug in an S Switch with new game modes from another monitor with the same model name to your monitor. Press one of the game mode buttons (labeled 1~3) on S Switch to apply and save the settings to your monitor.
   For example, if the Gamer 2 button is pressed, the Gamer 2 setting will be applied and overwrite **Gamer2** on the monitor.

- A system reset or mode reset will restore the monitor and the connected S Switch settings to the factory default values.
- Unplug the S Switch first if you wish to keep the game mode settings on it. To reset, see Reset Mode on page 58 or Reset All on page 58 for more information.
- If you wish to apply the Gamer 1/2/3 settings from S Switch temporarily without importing the profiles to your monitor, disable the **Auto Save** function from **Menu** > **Save** > **Auto Save** before pressing the Gamer 1/2/3 button on S Switch.
- If the **Auto Save** function is disabled from **Menu** > **Save** > **Auto Save** in the first place and you wish to import the profiles from S Switch to your monitor after pressing a game mode button, go to **Menu** > **Save** > **Save Settings**. Select **YES** to save the settings manually.

Alternatively, download **XL Setting to Share** from ZOWIE.BenQ.com to share game mode settings with compatible monitors easily. See Product support on page 3 for the access to the software and its user guide.

Enabling color vision accessibility (**Color Weakness**)

Color Weakness is accessibility that helps people with color vision deficiency to distinguish colors. You are provided with **Red Filter** and **Green Filter** on this monitor. Choose one as needed.

1. Press the 5-way controller to bring up the **Quick Menu**.
2. Go to **Menu** > **Color** > **Color Weakness**.
3. Choose either **Red Filter** or **Green Filter**.
4. Adjust the value of the filter. A stronger effect is produced as the value increases.

Adjusting Dynamic Accuracy

Dynamic Accuracy feature provides motion stability in games

1. Press the 5-way controller to bring up the **Quick Menu**.
2. Go to **Menu** > **Picture** > **DyAc** (XL2731K) / **DyAc^{+}** (XL2746K).

Activating VESA standard DisplayPort Adaptive-Sync

Monitors featuring with the VESA standard Adaptive-Sync will eliminate screen tearing, stuttering, and juddering during gaming.

1. Use a compatible graphics processing units (GPU) with the forthcoming driver. Confirm supported technologies please visit the website of your GPU manufacturer.
2. Ensure to connect with DisplayPort or HDMI 2.0 socket(*). See Connect the video cable. on page 14 for more information.
3. Go to **System** > **Adaptive-Sync** to turn on the function. Pay attention to the on-screen messages before the function switch.

- For any questions related to Adaptive-Sync performance please refer to the website of your GPU manufacturer.
- (*): HDMI 2.0 ports support AMD FreeSync™ Premium only.

Using **Scaling**

You can resize your display by **Scaling**.

1. Press the 5-way controller to bring up the **Quick Menu**.
2. Go to **Menu** > **Display** > **Scaling**.

Your display may become unstable temporarily when being resized. This is a normal phenomenon and should not be considered as manufacturing defect.

Initial setup for playing games at 165 / 240 Hz

You can optimize the monitor to enhance your gaming experience. You might want to start with the following steps.

Below is a list of maximum refresh rate and its supported models.

- 165 Hz: XL2731K
- 240 Hz: XL2746K

Available timings vary by model and input source. Download **Resolution file** from the website (see Product support on page 3). Refer to "**Preset display modes**" in **Resolution file** for more information.

Depending on the operating system on your PC, different procedures should be followed to adjust the screen refresh rate. Refer to the Help document of your operating system for details.

1. Set the screen refresh rate to **165 Hertz** (165 Hz) / **240 Hertz** (240 Hz). Right-click the desktop and select **Screen resolution**. Click **Advanced settings**. Under the **Monitor** tab, change the screen refresh rate to **165 Hertz** / **240 Hertz**. And then click **Apply** and **Yes** to confirm the change.

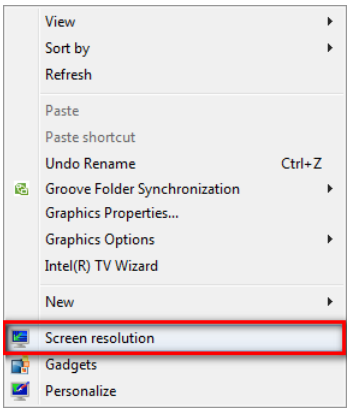

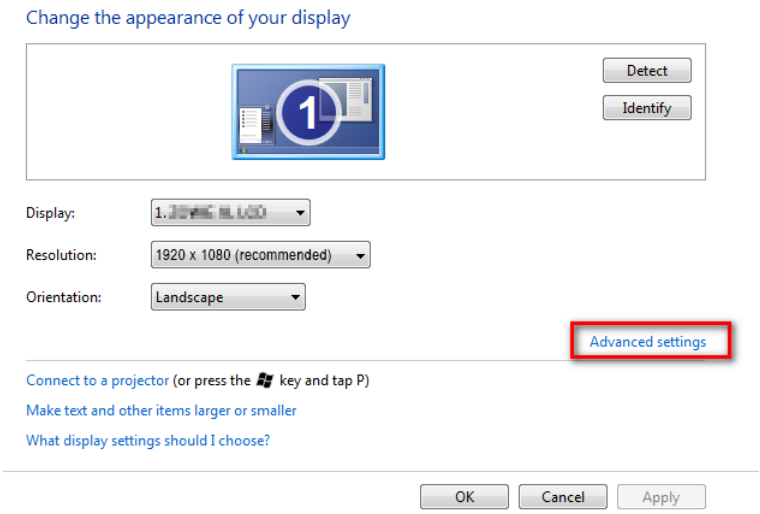

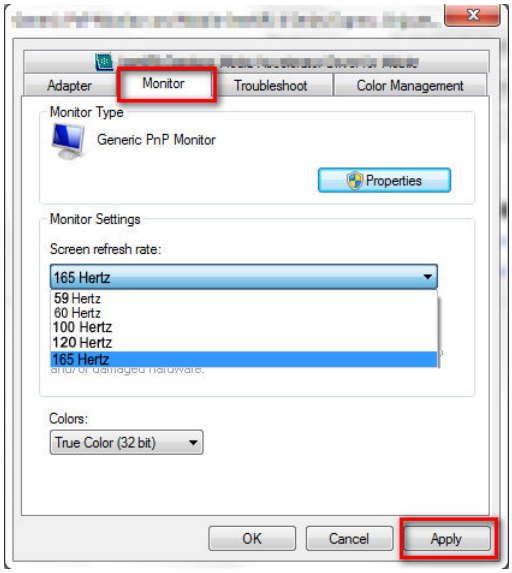

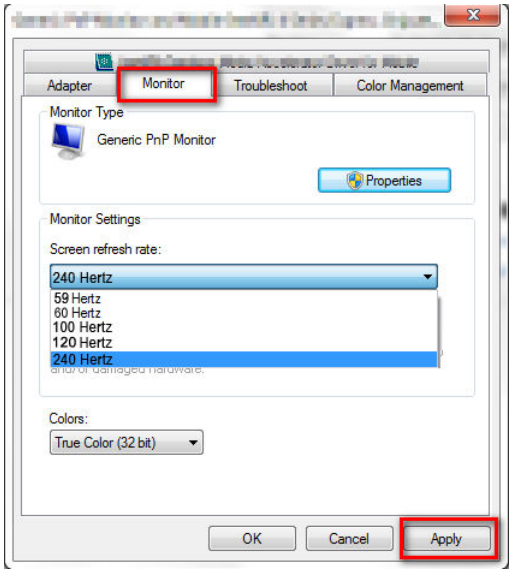

2. Go to the setup menu in your game, and change the frame rate or screen refresh rate to 165 Hz / 240 Hz. Refer to the Help document that came with your game for details.
3. To check if the screen refresh rate has been changed, go to the **Quick Menu** on your monitor and check the system information.

If 165 Hz / 240 Hz is not available on your menus, check the following:
- make sure the HDMI 2.0 cable or DisplayPort cable is properly connected to your computer and the monitor
- make sure your GPU supports 165 Hz / 240 Hz
- make sure your game supports 165 Hz / 240 Hz.

Updating the firmware

Your monitor came with a USB port reserved for firmware update respectively. Visit the local website from ZOWIE.BenQ.com for the firmware file if necessary. Note that settings on your monitor and S Switch (if connected to the monitor while updating firmware) will be erased after firmware update. If you prefer to keep the settings on S Switch, disconnect it before firmware update.

1. Download the firmware file (in *.bin format) from ZOWIE.BenQ.com > **Support** > **Download & FAQ** > model name > **Driver** to a USB flash drive. Note that the firmware file should be saved to the root directory (instead of a folder) of the USB flash drive and the filename should never be changed.

2. Connect the USB flash drive to the USB port reserved for firmware update on the rear of the monitor.

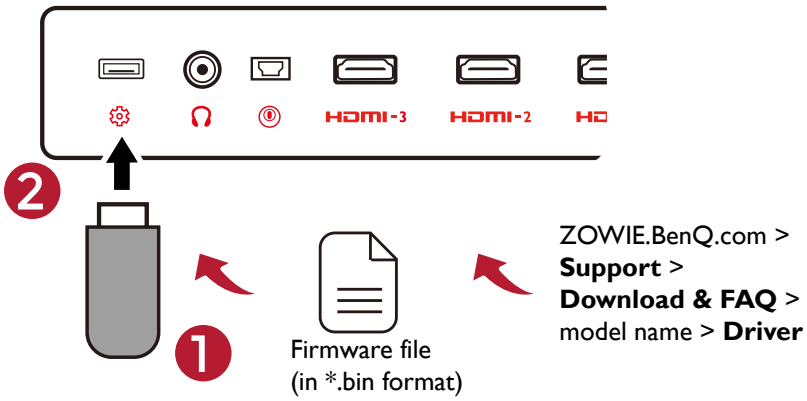

3. Restart the monitor by powering off and on. The firmware file will be detected after the monitor is powered on. Follow the on-screen instructions to proceed.

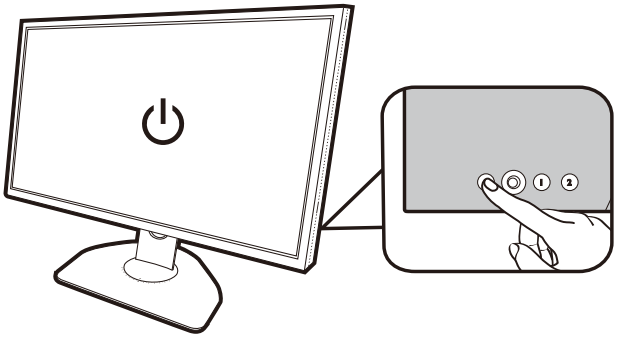

4. You will be prompted to activate Internet cafe mode. If activated, all the monitor settings will be reset to factory default values every time after switching off-on the monitor. This mode is highly recommended for cybercafe managers.
5. Unplug the USB flash drive after the update is complete or when you are instructed to.

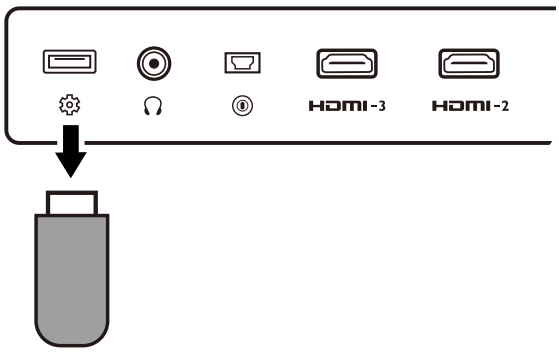

6. Press the power key on the rear of the monitor to reboot the monitor and complete the firmware update process.

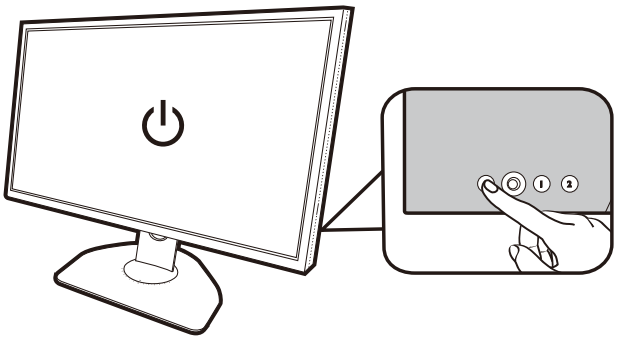

Updating the startup screen

You can customize the startup screen as desired. The new startup image will be aligned in center with 1:1 aspect ratio.

Getting your startup image ready

1. Prepare a 640 x 480 24-bit color image in *.bmp format. The file size should be less than 2 MB.
2. Name the image file so it begins with the model name of your monitor, e.g., XL2746K_xxxx.bmp.
3. Save the startup image to the root directory (instead of a folder) of a USB flash drive. Note that there should be no firmware file on the same USB flash drive.
4. Connect the USB flash drive to the USB port reserved for firmware update on the rear of the monitor.

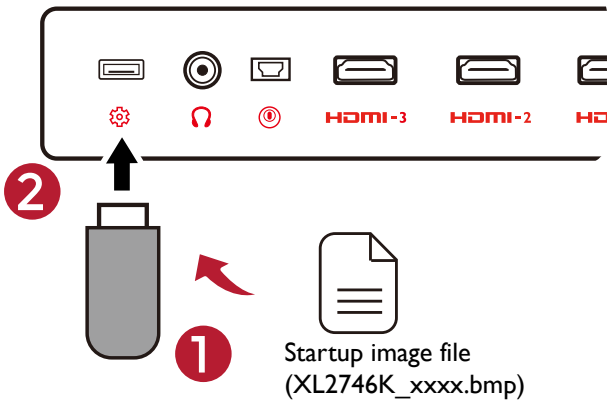

5. Restart the monitor by powering off and on. The image file will be detected after the monitor is powered on. Follow the on-screen instructions to proceed.

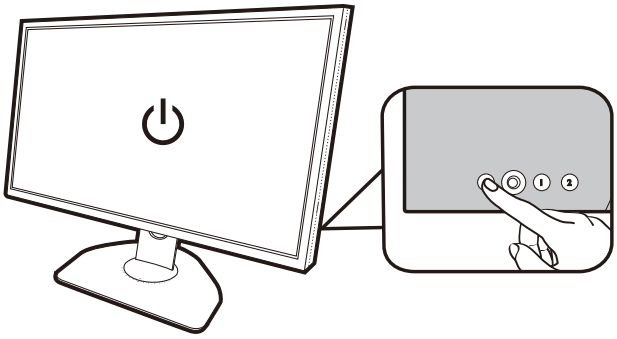

6. You will be prompted to activate Internet cafe mode. If activated, all the monitor settings will be reset to factory default values every time after switching off-on the monitor. This mode is highly recommended for cybercafe managers.
7. Unplug the USB flash drive after the progress is complete or when you are instructed to.

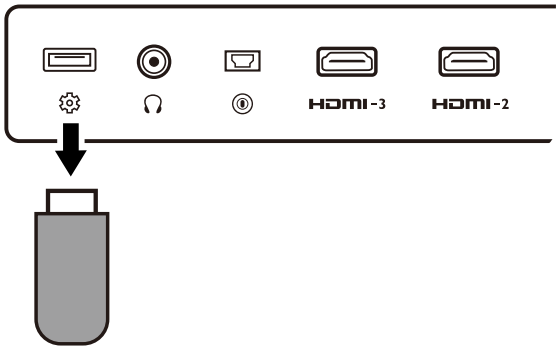

8. Press the power key on the rear of the monitor to reboot the monitor and complete the startup screen update process.

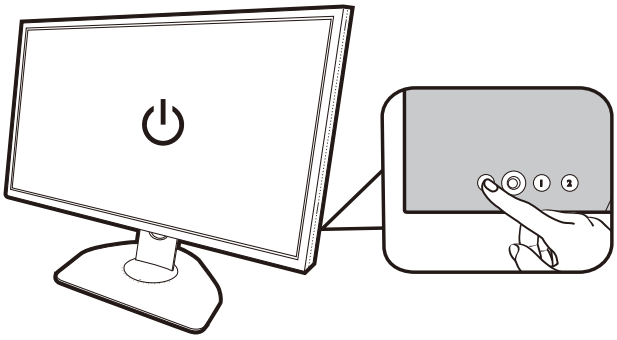

Navigating the main menu

You can use the OSD (On Screen Display) menu to adjust all the settings on your monitor.

Press the 5-way controller to bring up the **Quick Menu** and select **Menu** to access the main menu. See 5-way controller and basic menu operations on page 33 for details.

Available menu options may vary depending on the input sources, functions and settings. Menu options that are not available will become grayed out. And keys that are not available will be disabled and the corresponding OSD icons will disappear. For models without certain functions, their settings and related items will not appear on the menu.

The OSD menu languages may differ from the product supplied to your region, see Language on page 57 under **System** and **OSD Settings** for more details.

For more information on each menu, please refer to the following pages:

- Mode menu on page 45
- Color menu on page 46
- Picture menu on page 48
- Save menu on page 50
- Display menu on page 51
- Custom menu on page 53
- System menu on page 56

Mode menu

Available menu options may vary depending on the input sources, functions and settings. Menu options that are not available will become grayed out. And keys that are not available will be disabled and the corresponding OSD icons will disappear. For models without certain functions, their settings and related items will not appear on the menu.

1. Press the 5-way controller to bring up the **Quick Menu**.
2. Select **Menu** from the **Quick Menu**.
3. Use or to select **Mode**.
4. Select to go to a sub menu, and then use or to select a menu item.
5. Use or to make adjustments, or use to make selection.
6. To return to the previous menu, select .
7. To exit the menu, select .

Item	Function		Range
Mode	Select a picture mode that best suits the type of images shown on the screen. The default picture mode is **FPS1** (for FPS games). Change the setting if needed.		
	FPS1	For playing FPS (First Person Shooting) games.	
	FPS2		
	FPS3		
	Gamer1	Applied customized display settings.	
	Gamer2	For details on setting up a game mode, see Setting up your own game mode on page 37.	
	Gamer3		
	Movie	For viewing videos.	
	Standard	For basic PC application.	

Color menu

Available menu options may vary depending on the input sources, functions and settings. Menu options that are not available will become grayed out. And keys that are not available will be disabled and the corresponding OSD icons will disappear. For models without certain functions, their settings and related items will not appear on the menu.

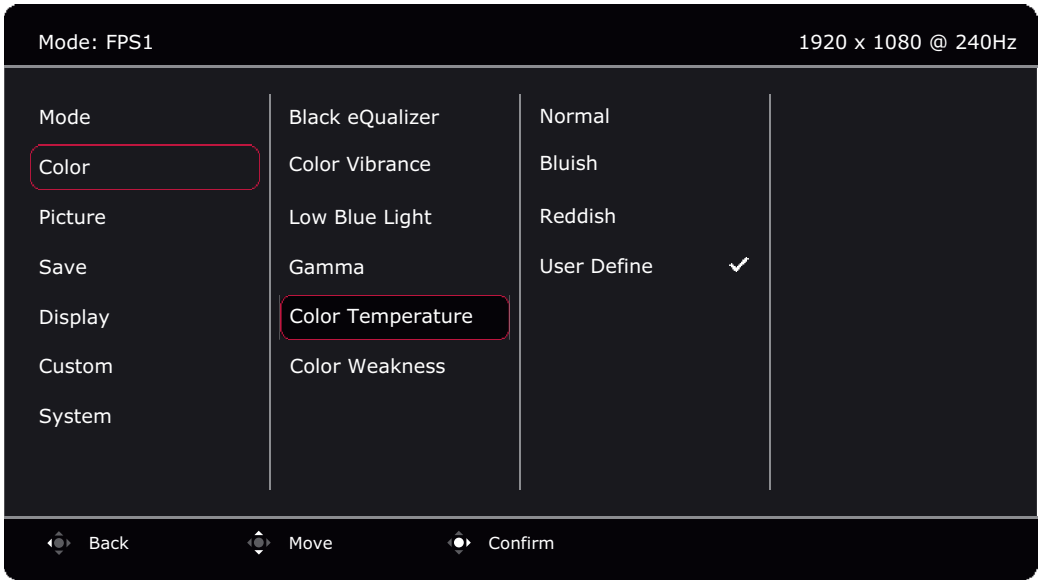

1. Press the 5-way controller to bring up the **Quick Menu**.
2. Select **Menu** from the **Quick Menu**.
3. Use or to select **Color**.
4. Select to go to a sub menu, and then use or to select a menu item.
5. Use or to make adjustments, or use to make selection.
6. To return to the previous menu, select .
7. To exit the menu, select .

Item	Function	Range
Black eQualizer	Brings out the dark shades by increasing the brightness without changing those of the light shades. If the image is too bright or barely contains any dark shades, adjusting the value of **Black eQualizer** may not show much change to the image.	0 ~ 20
Color Vibrance	Provides different sets of color settings. Once applied, you can adjust some of the color settings in the corresponding menus.	0 ~ 20
Low Blue Light	Decreases the blue light emitted from the display to reduce the risk of blue light exposure to your eyes. The amount of blue light reduced in each low blue light mode varies and has been set particularly for the specified scenario. Choose one mode to suit your needs.	0 ~ 10

Item	Function		Range
Gamma	Adjusts the tone luminance.		• **1** • **2** • **3** • **4** • **5**
Color Temperature	**Normal**	Allows video and still photographs to be viewed with natural coloring. This is the factory default color.	
	Bluish	Applies a cool tint to the image and is factory pre-set to the PC industry standard white color.	
	Reddish	Applies a warm tint to the image and is factory pre-set to the news print standard white color.	
	User Define	The blend of the Red, Green and Blue primary colors can be altered to change the color tint of the image. Go to the succeeding **R** (red), **G** (green), and **B** (blue) menus to change the settings. Decreasing one or more of the colors will reduce their respective influence on the color tint of the image. (e.g. if you reduce the Blue level the image will gradually take on a yellowish tint. If you reduce Green, the image will become a magenta tint.)	• **R** (0 ~ 100) • **G** (0 ~ 100) • **B** (0 ~ 100)
Color Weakness	Adjusts color matching representation for people with color vision deficiency to distinguish colors easily.		
	Red Filter	Decides the effect produced by the red filter. A stronger effect is produced as the value increases.	0 ~ 20
	Green Filter	Decides the effect produced by the green filter. A stronger effect is produced as the value increases.	0 ~ 20
	OFF	Disables Color Weakness function.	

Picture menu

Available menu options may vary depending on the input sources, functions and settings. Menu options that are not available will become grayed out. And keys that are not available will be disabled and the corresponding OSD icons will disappear. For models without certain functions, their settings and related items will not appear on the menu.

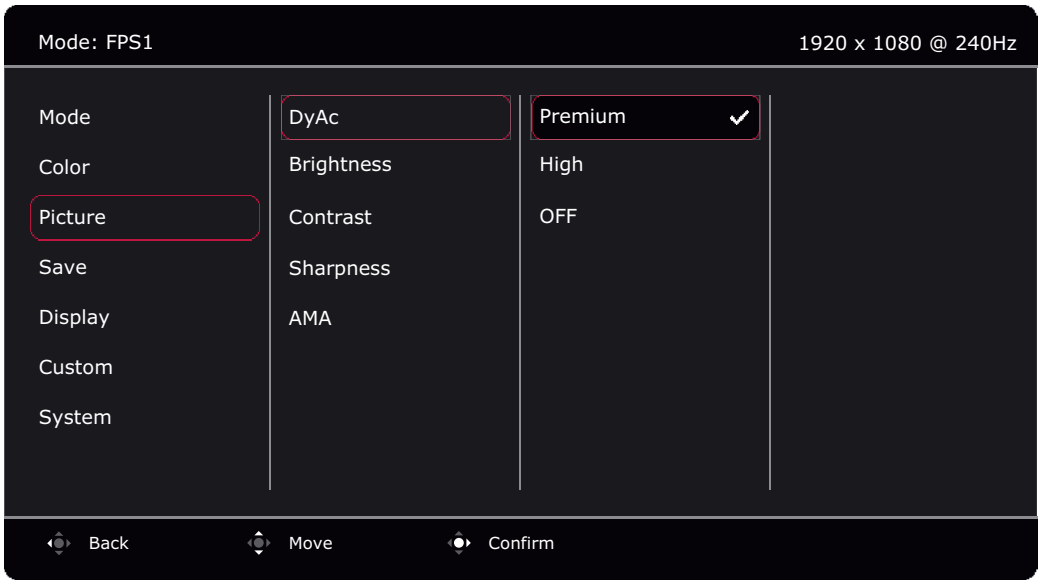

1. Press the 5-way controller to bring up the **Quick Menu**.
2. Select **Menu** from the **Quick Menu**.
3. Use or to select **Picture**.
4. Select to go to a sub menu, and then use or to select a menu item.
5. Use or to make adjustments, or use to make selection.
6. To return to the previous menu, select .
7. To exit the menu, select .

Item	Function	Range
DyAc (XL2731K) / **DyAc+** (XL2736K)	Dynamic Accuracy feature provides motion stability in games. This feature is recommended only when the refresh rate is 100 Hz or higher. Once changed and saved, the setting takes effect immediately and applies to all modes. (XL2731K only) Due to the design limitations of the panel, the brightness will be reduced when **DyAc** is switched on.	• **Premium** • **High** • **OFF**
Brightness	Adjusts the balance between light and dark shades.	0 ~ 100
Contrast	Adjusts the degree of difference between darkness and lightness.	0 ~ 100
Sharpness	Adjusts the clarity and visibility of the edges of the subjects in the image.	1 ~ 10

Item	Function	Range
AMA	Improves the gray level response time of the LCD panel. Once changed and saved, the setting takes effect immediately and applies to all modes.	• **Premium** • **High** • **OFF**

Save menu

Available menu options may vary depending on the input sources, functions and settings. Menu options that are not available will become grayed out. And keys that are not available will be disabled and the corresponding OSD icons will disappear. For models without certain functions, their settings and related items will not appear on the menu.

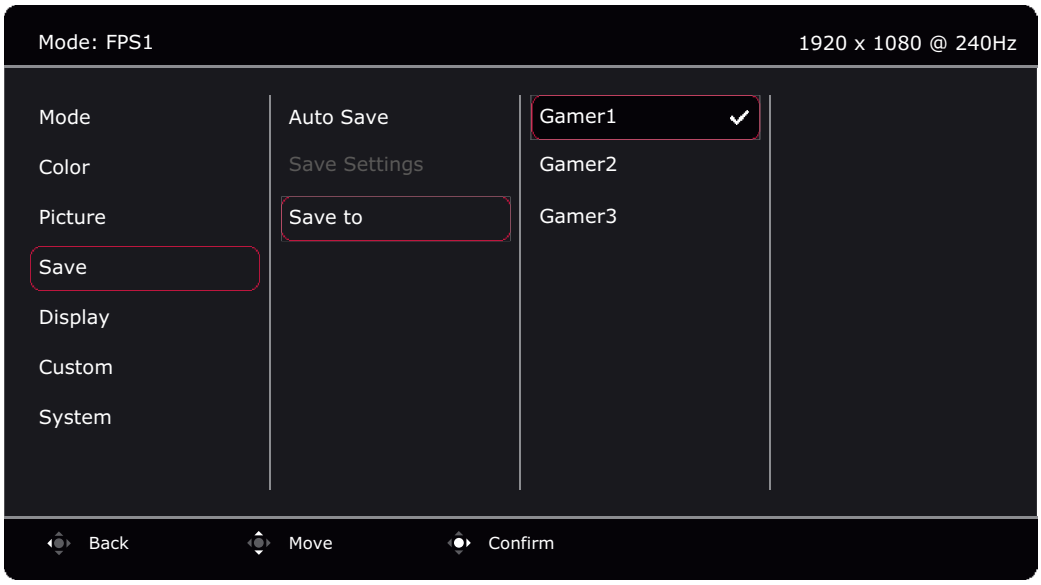

1. Press the 5-way controller to bring up the **Quick Menu**.
2. Select **Menu** from the **Quick Menu**.
3. Use or to select **Save**.
4. Select to go to a sub menu, and then use or to select a menu item.
5. Use or to make adjustments, or use to make selection.
6. To return to the previous menu, select .
7. To exit the menu, select .

Item	Function	Range
Auto Save	Saves the adjusted display settings to the current mode automatically. If **Auto Save** is disabled, you need to go to **Save** > **Save Settings** to manually save the settings to the current mode after display adjustment.	• **ON** • **OFF**
Save Settings	Saves the adjusted display settings to the current mode manually. Available only when **Auto Save** is disabled.	• **YES** • **NO**
Save to	Saves a new set of customized display settings. See Setting up your own game mode on page 37 for information on applying the game mode.	• **Gamer1** • **Gamer2** • **Gamer3**

Display menu

Available menu options may vary depending on the input sources, functions and settings. Menu options that are not available will become grayed out. And keys that are not available will be disabled and the corresponding OSD icons will disappear. For models without certain functions, their settings and related items will not appear on the menu.

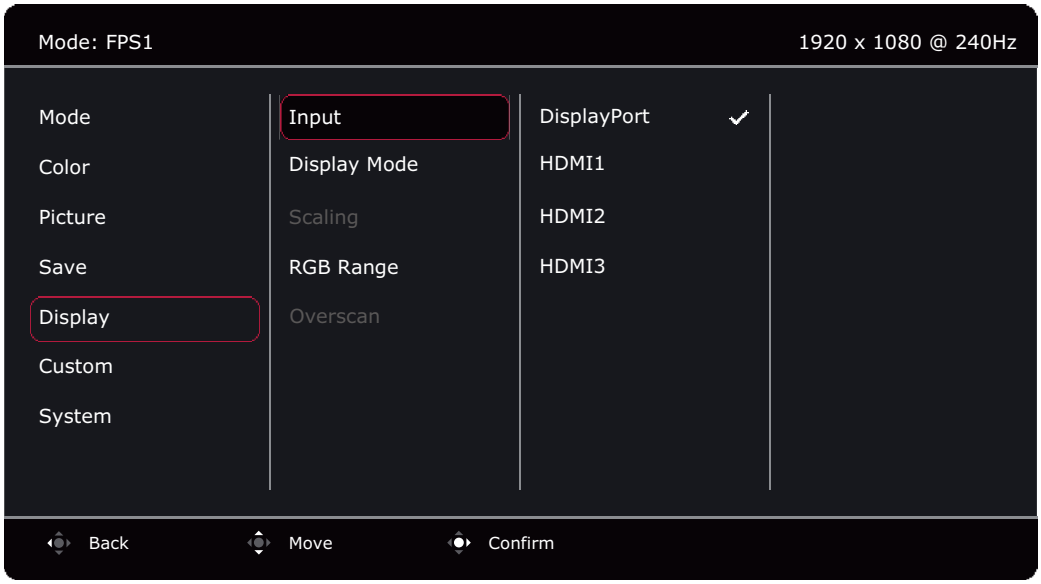

1. Press the 5-way controller to bring up the **Quick Menu**.
2. Select **Menu** from the **Quick Menu**.
3. Use or to select **Display**.
4. Select to go to a sub menu, and then use or to select a menu item.
5. Use or to make adjustments, or use to make selection.
6. To return to the previous menu, select .
7. To exit the menu, select .

Item	Function		Range
Input	Use this to change the input to that appropriate to your video cable connection type.		• **DisplayPort** • **HDMI1** • **HDMI2** • **HDMI3**
Display Mode	This feature is provided to allow aspect ratios other than 16:9 to be displayed without geometric distortion. The options under **Display Mode** will be different depending on the input signal sources. Depending on your selection of **Mode**, different **Display Mode** option is pre-set. Change the setting if needed.		
	Full	Scales the input image to fill the screen. Ideal for 16:9 aspect images.	

Item	Function		Range
	Aspect	The input image is displayed without geometric distortion filling as much of the display as possible.	
	1:1	Displays the input image in its native resolution without scaling.	
	17" (4:3)	Displays the input image as if on a 17" monitor of 4:3 aspect ratio.	
	19" (4:3)	Displays the input image as if on a 19" monitor of 4:3 aspect ratio.	
	19" (5:4)	Displays the input image as if on a 19" monitor of 5:4 aspect ratio.	
	19"W (16:10)	Displays the input image as if on a 19"W monitor of 16:10 aspect ratio.	
	21.5" (16:9)	Displays the input image as if on a 21.5" monitor of 16:9 aspect ratio.	
	22"W (16:10)	Displays the input image as if on a 22"W monitor of 16:10 aspect ratio.	
	23"W (16:9)	Displays the input image as if on a 23"W monitor of 16:9 aspect ratio.	
	23.6"W (16:9)	Displays the input image as if on a 23.6"W monitor of 16:9 aspect ratio.	
	24"W (16:9)	Displays the input image as if on a 24"W monitor of 16:9 aspect ratio.	
	24.5"W (16:9)	Displays the input image as if on a 24.5"W monitor of 16:9 aspect ratio.	
Scaling	Adjusts the display size to best suit your needs. Not available when the **Display Mode** is set to **Full** or **Aspect**. For other modes (except **1:1**), each mode with its last scaling setting can be saved as quick access. If the **Display Mode** is **1:1** (and the resolution of the input source is lower than 1920 x 1080), the last 3 scaling settings (in different resolutions of the input source) will be saved for quick access.		0 ~ 100
RGB Range	Determines the range of color scales. Select an option that matches the RGB range setting on the connected device.		• **Auto Detect** • **RGB (0~255)** • **RGB (16~255)**
Overscan	Slightly enlarges the input image. Use this feature to hide annoying edge noise if present around your image.		• **ON** • **OFF**

Custom menu

Available menu options may vary depending on the input sources, functions and settings. Menu options that are not available will become grayed out. And keys that are not available will be disabled and the corresponding OSD icons will disappear. For models without certain functions, their settings and related items will not appear on the menu.

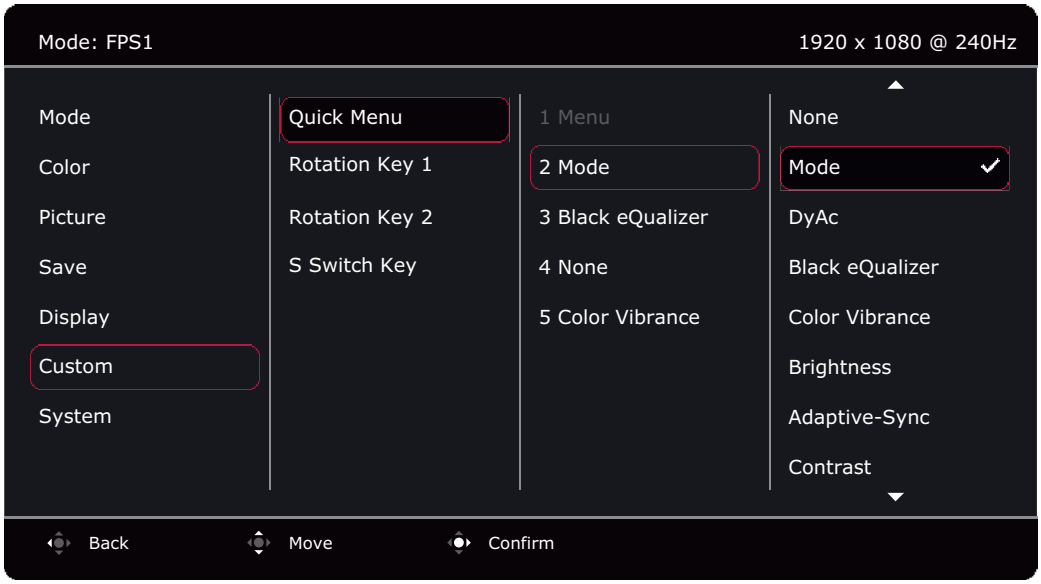

1. Press the 5-way controller to bring up the **Quick Menu**.
2. Select **Menu** from the **Quick Menu**.
3. Use or to select **Custom**.
4. Select to go to a sub menu, and then use or to select a menu item.
5. Use or to make adjustments, or use to make selection.
6. To return to the previous menu, select .
7. To exit the menu, select .

Item	Function	Range
Quick Menu	Sets 2 to 4 settings that could be frequently adjusted from the **Quick Menu**. Do not choose the same item for 2 settings or choose **None** for more than 2 settings. See Customizing the Quick Menu on page 36 for more information.	• **None** • Mode (see page 45) • DyAc (XL2731K) / DyAc+ (XL2736K) (see page 48) (selected models only) • Black eQualizer (see page 46) • Color Vibrance (see page 46) • Brightness (see page 48) • Adaptive-Sync (see page 56) • Contrast (see page 48) • Input (see page 51) • Low Blue Light (see page 46) • Gamma (see page 47) • Sharpness (see page 48) • AMA (see page 49)
Rotation Key 1 **Rotation Key 2**	Sets the function to be accessed by the Rotation key 1 / Rotation key 2 on the back of the monitor. See The control panel on page 31 for the location of the key. Select a category first, and choose up to 3 options to be accessed by this key.	• Mode (see page 45) • DyAc (XL2731K) / DyAc+ (XL2736K) (see page 48) (selected models only) • AMA (see page 49) • Input (see page 51)

Item	Function	Range
S Switch Key	Sets the function to be accessed by the S Switch Key on S Switch. See The S Switch on page 31 for the location of the key. Select a category first, and choose up to 3 options to be accessed by this key.	• Mode (see page 45) • DyAc (XL2731K) / DyAc+ (XL2736K) (see page 48) (selected models only) • AMA (see page 49) • Input (see page 51)

System menu

Available menu options may vary depending on the input sources, functions and settings. Menu options that are not available will become grayed out. And keys that are not available will be disabled and the corresponding OSD icons will disappear. For models without certain functions, their settings and related items will not appear on the menu.

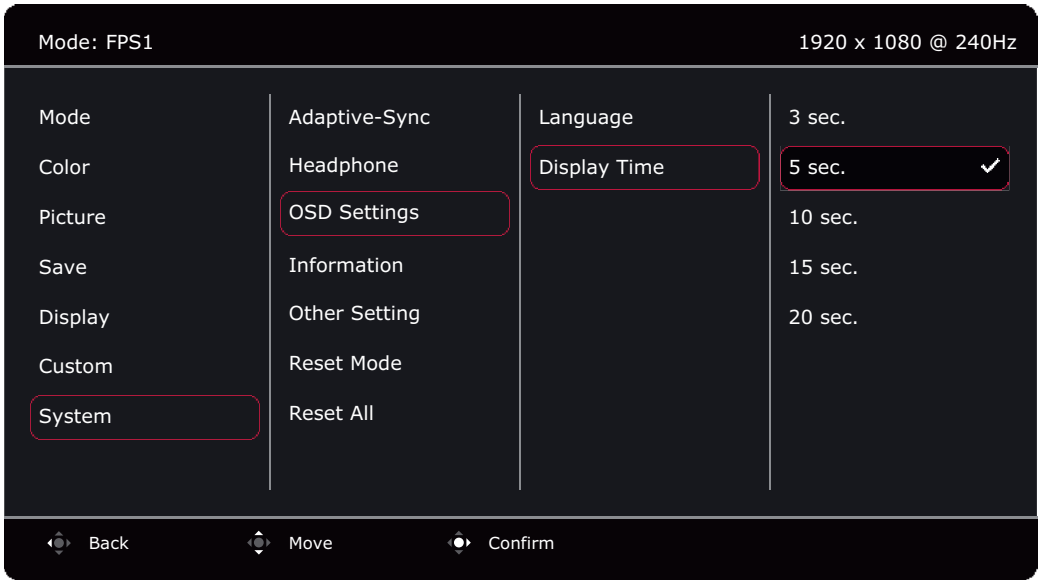

1. Press the 5-way controller to bring up the **Quick Menu**.
2. Select **Menu** from the **Quick Menu**.
3. Use or to select **System**.
4. Select to go to a sub menu, and then use or to select a menu item.
5. Use or to make adjustments, or use to make selection.
6. To return to the previous menu, select .
7. To exit the menu, select .

Item	Function		Range
Adaptive-Sync	Turns the Adaptive-Sync function on or off. Pay attention to the on-screen messages before the function switch. Once changed and saved, the setting takes effect immediately and applies to all modes.		• **ON** • **OFF**
Headphone	**Volume**	Adjusts the audio volume. Due to graphic limitation on some of the graphic cards, the headphone jack on the monitor may not output audio signal. To output audio signal in this case, please use the headphone jack on the PC.	0 ~ 100
	Mute	Mutes the volume.	• **ON** • **OFF**

Item	Function		Range
OSD Settings	**Language**	Sets the OSD menu language. The language options displayed on your OSD may differ from those shown on the right, depending on the product supplied in your region.	• **English** • **Français** • **Deutsch** • **Italiano** • **Español** • **Polski** • **Česky** • **Magyar** • **Română** • **Nederlands** • **Русский** • **Svenska** • **Português** • العربية • 日本語 • 한국어 • 繁體中文 • 简体中文
	Display Time	Adjusts the display time of the OSD menu.	• **3 sec.** • **5 sec.** • **10 sec.** • **15 sec.** • **20 sec.**
Information	Displays the product information.		• **Model Name** • **Input** • **Optimum Resolution** (best with the monitor) • **Adaptive-Sync**

Item	Function		Range
Other Setting	**Resolution Notice**	Sets whether to display the resolution notice of the recommended resolution when a new input source is detected by the monitor	• **ON** • **OFF**
	Buzzer	Turns the tone of control keys on or off.	• **ON** • **OFF**
	Input Auto Switch	Sets to automatically detect the available input source.	• **ON** • **OFF**
	Auto Power Off	Sets the time to power off the monitor automatically in power saving mode.	• **OFF** • **10 min** • **20 min** • **30 min**
	LED Indicator	Determines the brightness of the LED indicator.	• **ON** • **OFF**
	DDC/CI	Allows the monitor settings to be set through the software on the PC. DDC/CI, short for Display Data Channel/Command Interface, which was developed by Video Electronics Standards Association (VESA). DDC/CI capability allows monitor controls to be sent via the software for remote diagnostics.	• **ON** • **OFF**
Reset Mode	Resets the current or all picture modes.		
	Current Mode	Resets the current picture mode. If the current mode is **Gamer1** / **Gamer2** / **Gamer3** and an S Switch is connected to the monitor, the same mode on both the monitor and S Switch will be reset.	
	All Modes	Resets all picture modes. If an S Switch is connected to your monitor while performing this operation, the game mode settings saved on S Switch will be reset as well.	
Reset All	Resets all mode, color and geometry settings to the factory default values. If an S Switch is connected to your monitor while performing this operation, the game mode settings saved on S Switch will be reset as well. Unplug the S Switch first if you wish to keep the game mode settings on it.		• **YES** • **NO**

Troubleshooting

Frequently asked questions (FAQ)

Imaging

The image has a faulty coloration.

It has a yellow, blue or pink appearance.

- The default picture mode is **FPS1** (for FPS games). If you prefer other picture modes, go to **Mode** and change setting.
- If the image has a yellow, blue or pink appearance, go to **System** and **Reset Mode** to reset the color settings to the factory defaults.

If the image is still not correct and the OSD also has faulty coloration, this means one of the three primary colors is missing in the signal input. Now check the signal cable connectors. If any pin is bent or broken off, please contact your dealer to get necessary support.

The image is blurred.

Download **Resolution** file from the website (see Product support on page 3). Refer to **"Adjusting the Screen Resolution"**. And then select the correct resolution, refresh rate and make adjustments based on these instructions.

Does the blurring only occur at resolutions lower than the native (maximum) resolution?

Download **Resolution** file from the website (see Product support on page 3). Refer to **"Adjusting the Screen Resolution"**. Select the native resolution.

Pixel errors can be seen.

One of several pixels is permanently black, one or more pixels are permanently white, one or more pixels are permanently red, green, blue or another color.

- Clean the LCD screen.
- Cycle power on-off.
- These are pixels that are permanently on or off and is a natural defect that occurs in LCD technology.

The image is distorted, flashes or flickers.

Download **Resolution** file from the website (see Product support on page 3). Refer to **"Adjusting the Screen Resolution"**. And then select the correct resolution, refresh rate and make adjustments based on these instructions.

You are running the monitor at its native resolution, but the image is still distorted.

Images from different input sources may appear distorted or stretched on the monitor running at its native resolution. To have the optimal display performance of each type of input sources, you can use the **Display Mode** function to set a proper aspect ratio for the input sources. See Display Mode on page 51 for details.

The image is displaced in one direction.

Download **Resolution** file from the website (see Product support on page 3). Refer to **"Adjusting the Screen Resolution"**. And then select the correct resolution, refresh rate and make adjustments based on these instructions.

Faint shadow from the static image displayed is visible on the screen.

- Activate the power management function to let your computer and monitor go into a low power "sleep" mode when not actively in use.
- Use a screensaver to prevent the occurrence of image retention.

Power LED indicator

The LED indicator is white or orange.

- If the LED lights up in solid white, the monitor is powered on.
- If the LED is illuminated in white and there is a message **Out of Range** on the screen, this means you are using a display mode that this monitor does not support, please change the setting to one of the supported mode. Download **Resolution** file from the website (see Product support on page 3). Refer to **"Adjusting the Screen Resolution"**. And then select the correct resolution, refresh rate and make adjustments based on these instructions.
- If the LED is illuminated in orange, the power management mode is active. Press any button on the computer keyboard or move the mouse. If that does not help, check the signal cable connectors. If any pin is bent or broken off, please contact your dealer to get necessary support.
- If the LED is off, check the power supply mains socket, the external power supply and the mains switch.

OSD controls

The OSD controls are inaccessible.

To unlock the OSD controls when it is preset to be locked, press and hold any key for 10 seconds.

OSD messages

A message **Out of Range** on the screen during computer boot up process.

If there is a message **Out of Range** on the screen during computer boot up process, this means computer compatibility caused by operating system or graphic card. The system will adjust the refresh rate automatically. Just wait until the operating system is launched.

Audio

No sound can be heard from the connected external speakers.

- Remove your headphone (if the headphone is connected to the monitor).
- Check whether the headphone jack is properly connected.
- If the external speakers are USB-powered, check whether the USB connection is OK.
- Increase the volume (volume may be muted or too low) on the external speakers.

Need more help?

If your problems remain after checking this manual, please contact your place of purchase or visit the local website from ZOWIE.BenQ.com for more support and local customer service.