32"-75" Motorized TV Swing Mount Bracket

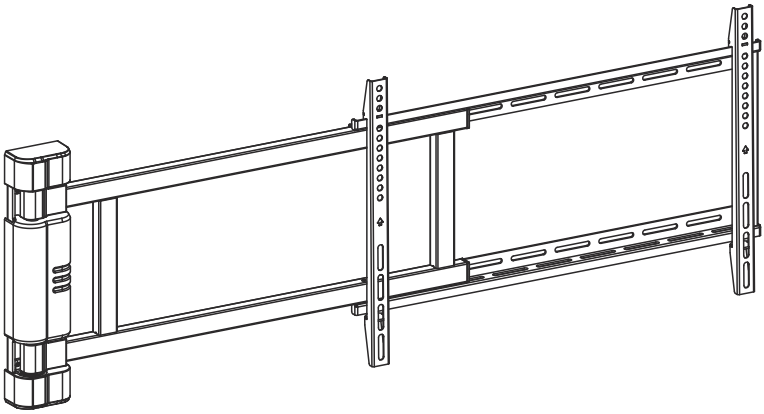

Digital Data Communications GmbH
Im Defdahl 10F
44141 Dortmund, Germany
Tel: +49 231 9075 222

650336	VESA Compatible 200x200 200x300 200x400 300x200 300x300 300x400 400x200 400x300 400x400 600x200 600x300 600x400	75" MAX FLAT/CURVED	50kg (110lbs) RATED

INSTALLATION MANUAL

EN Read the entire instruction manual before you start installation and assembly. If you have any questions regarding any of the instructions or warnings, please contact your local distributor for assistance.

CAUTION: Use with products heavier than the rated weights indicated may result in instability causing possible injury.
- Mounts must be attached as specified in assembly instructions. Improper installation may result in damage or serious personal injury.
- Safety gear and proper tools must be used. This product should only be installed by professionals.
- Make sure that the supporting surface will safely support the combined weight of the equipment and all attached hardware and components.
- Use the mounting screws provided and DO NOT OVER TIGHTEN mounting screws.
- This product contains small items that could be a choking hazard if swallowed. Keep these items away from children.
- This product is intended for indoor use only. Using this product outdoors could lead to product failure and personal injury.

IMPORTANT: Ensure that you have received all parts according to the component checklist prior to installation. If any parts are missing or faulty, telephone your local distributor for a replacement.

MAINTENANCE: Check that the bracket is secure and safe to use at regular intervals (at least every three months).

DE Bitte vor Beginn der Montage und Zusammenbau das ganze Handbuch durchlesen. Bitte sich mit dem Händler vor Ort bei Fragen zur Anleitung oder Warnungen in Verbindung setzen.

VORSICHT: Bei Verwendung mit Produkten, die das zulässige Gewicht überschreiten, können Schäden oder möglicherweise Verletzungen die Folge sein.
- Halterungen sollen entsprechend den Montageanweisungen angebracht werden. Eine unsachgemäße Montage kann Schäden oder Verletzungen zur Folge haben.
- Sicherheitsausrüstung und geeignete Werkzeuge verwenden. Die Montage des Produktes sollte nur von Fachleuten durchgeführt werden.
- Die tragenden Oberflächen sollten das gesamte Gewicht von Geräten und allen zusätzlichen Bauteilen sicher aushalten können.
- Nur die mitgelieferten Einbauschrauben verwenden und die Schrauben NICHT ZU FEST ANZIEHEN.
- Dieses Produkt enthält Kleinteile, die Erstickungsgefahr beim Verschlucken hervorrufen können. Diese Teile von Kindern fernhalten.
- Dieses Produkt nur in Innenräumen verwenden. Verwendung des Produktes im Außenbereich kann zu Verletzungen und Schäden führen.

WICHTIG: Vor der Montage bitte alle erhaltenen Bauteile mit der Bauteileliste abgleichen. Bei beschädigten oder fehlenden Teilen den Händler vor Ort nach Ersatzteilen fragen.

WARTUNG: Die Halterungsklammer regelmäßig auf Sicherheit und Stabilität prüfen (am besten alle drei Monate).

FR Lisez entièrement le guide d'utilisateur avant de commencer l'installation et le montage. SI vous avez des questions concernant les instructions ou les avertissements, veuillez contacter votre distributeur local pour une assistance.

ATTENTION: L'utilisation de produits plus lourds que les poids nominaux indiqués peut entraîner une instabilité causant des blessures potentielles.
- Les supports doivent être joints comme spécifié dans les instructions de montage. Une mauvaise installation peut entraîner des dommages ou de graves blessures aux personnes.
- Un équipement de sécurité et les outils appropriés doivent être utilisés. Ce produit devrait être installé uniquement par des professionnels.
- Assurez-vous que la surface de soutien supporte en sécurité le poids combiné de l'équipement et de tous les matériaux et composantes associés.
- Utilisez les vis de montage fournies et NE SERREZ PAS TROP les vis de montage.
- Ce produit contient de petites pièces qui peuvent causer un étouffement si elles sont avalées. Eloignez ces pièces des enfants.
- Ce produit est prévu uniquement pour une utilisation à l'intérieur. L'utilisation de ce produit à l'extérieur peut entraîner une défaillance du produit ou des blessures aux personnes.

IMPORTANT: Avant l'installation, assurez-vous que vous avez reçu toutes les pièces selon la liste de vérification des composants. Si une pièce est manquante ou endommagée, téléphonez à votre distributeur local pour qu'il la remplace.

MAINTENANCE: A intervalles réguliers (au moins tous les trois mois) vérifiez que le support est d'utilisation sûre et fiable.

IT Leggere l'intero manuale di istruzioni prima di iniziare l'installazione e il montaggio. In caso di domande su istruzioni o avvertenze, contattare il distributore locale per assistenza.

ATTENZIONE: l'uso con prodotti più pesanti dei pesi nominali indicati può causare instabilità provocando possibili infortuni.
I montaggi devono essere effettuati come specificato nelle istruzioni. Un'installazione errata può provocare danni o gravi lesioni personali.
Devono essere utilizzati dispositivi di sicurezza e strumenti adeguati. Questo prodotto deve essere installato solo da professionisti.
Questo prodotto è progettato per essere installato su pareti in legno, pareti in cemento o pareti in mattoni.
. Assicurarsi che la superficie di supporto sia in grado di sostenere in modo sicuro il peso combinato dell'attrezzatura e di tutto l'hardware e i componenti collegati.
Utilizzare le viti di montaggio fornite e NON STRINGERE LE VITI di montaggio.
Questo prodotto contiene piccoli oggetti che potrebbero essere pericolosi se ingeriti. Tenere questi oggetti lontano dalla portata dei bambini.
Questo prodotto è destinato esclusivamente ad uso interno. L'uso di questo prodotto all'aperto potrebbe causare guasti al prodotto e lesioni personali.

IMPORTANTE: assicurarsi di aver ricevuto tutte le parti come da elenco di controllo dei componenti prima dell'installazione. In caso di parti mancanti o difettose, telefonare al proprio distributore locale per una sostituzione.

MANUTENZIONE: verificare che la staffa sia ben installalata e assicurarsi di utilizzarela regolarmente (almeno ogni tre mesi).

ES Lea todo el manual de instrucciones antes de comenzar la instalación y ensamble de la unidad. Si tiene alguna inquietud con respecto a las instrucciones o advertencias, comuníquese con su distribuidor local.

PRECAUCIÓN: utilizar con productos de mayor peso al indicado en los límites de peso podría ocasionar inestabilidad y posibles heridas personales.
- Los soportes deben acoplarse tal como se indica en las instrucciones de ensamble. Una incorrecta instalación podría ocasionar daños y serias heridas personales.
- Utilice las herramientas y equipo de seguridad adecuados. Este producto solo debe ser instalado por profesionales.
- Asegúrese de que la superficie de fijación sostenga de manera segura el peso total del equipo y todos sus componentes y hardware.
- Utilice los tornillos de ensamble suministrados y NO aplique demasiada tensión a los tornillos.
- Este producto contiene piezas pequeñas que representan un riesgo de asfixia. Mantenga estas piezas fuera del alcance de los niños.
- Este producto está diseñado para uso en interiores solamente. Utilizar este producto en exteriores podría ocasionar fallas y heridas personales.

IMPORTANTE: Asegúrese de que haya recibido todas las piezas según la lista de verificación de componentes para la instalación. Si falta alguna de las partes, o está dañada, comuníquese con su distribuidor.

MANTENIMIENTO: Compruebe periódicamente que el soporte esté asegurado y listo para usar (al menos cada tres meses).

PT Leia todo o manual de instruções antes de iniciar a instalação e montagem. Se você tiver alguma dúvida sobre quaisquer uma das instruções ou avisos, por favor, entre em contato com o seu distribuidor local para assistência.

ATENÇÃO: O uso com produtos mais pesados do que os pesos indicados pode resultar em instabilidade, causando possíveis danos.
- Os suportes devem ser anexados como especificado nas instruções de montagem. A instalação incorreta pode causar danos ou sérias lesões pessoais.
- Equipamentos de segurança e ferramentas adequadas devem ser utilizadas. Este produto só deve ser instalado por profissionais.
- Certifique-se que a superfície de suporte suportará com segurança o peso combinado do equipamento e todas as ferragens e componentes anexados.
- Use os parafusos de montagem fornecidos e NÃO APERTE EXCESSIVAMENTE os mesmos.
- Este produto contém pequenas peças que podem causar asfixia se ingeridas. Mantenha esses itens longe do alcance de crianças.
- Este produto destina-se somente para uso interno. Usá-lo em ambiente externo pode causar falhas no produto e lesões pessoais.

IMPORTANTE: Assegure-se que você recebeu todas as peças, de acordo com a lista de componentes, antes da instalação. Se alguma peça estiver faltando ou é defeituosa, contate o seu distribuidor local para substituição.

MANUTENÇÃO: Certifique-se que o suporte seja seguro e protegido para o uso em intervalos regulares (pelo menos a cada três meses).

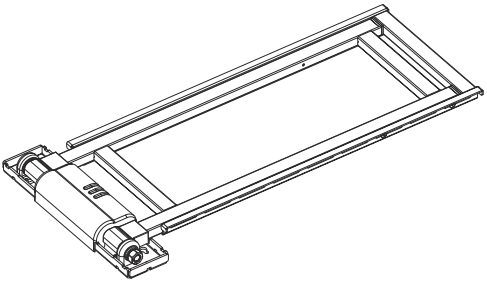

A (x1)

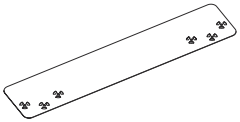

B (x1)

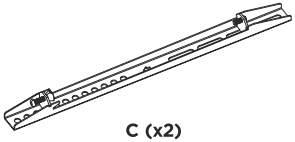

C (x2)

D (x1)

E (x1)

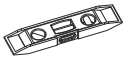

F (x1)

G (x1)

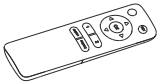

H (x1)

I (x5)

J (x1)
4mm

M-A (x4)
M5x14

M-B (x4)
M6x14

M-C (x4)
M6x30

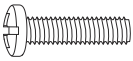

M-D (x4)
M8x30

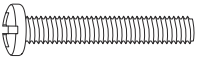

M-E (x4)
M8x50

M-F (x4)
D5-D8

M-G (x8)
Ø15xØ8x5

M-H (x8)
Ø15xØ8x15

W-A (x6)
ST6.3x55

W-B (x6)
Ø10x45

W-C (x4)
D6

1.

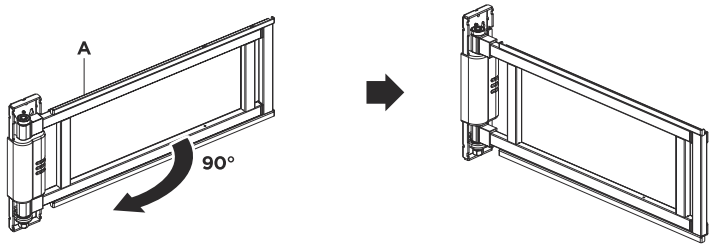

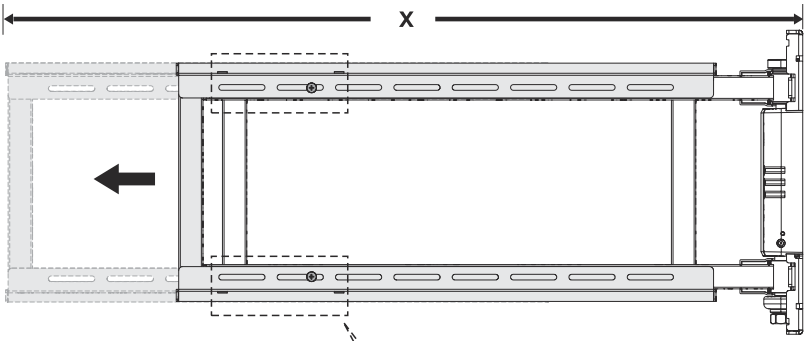

The swing arm needs to be adjusted according to the size of TV.

X= L/2+330(mm)

X: Length of swing arm
L: Length of TV

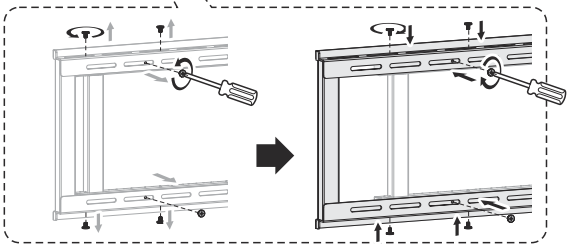

2.

Forward Installation

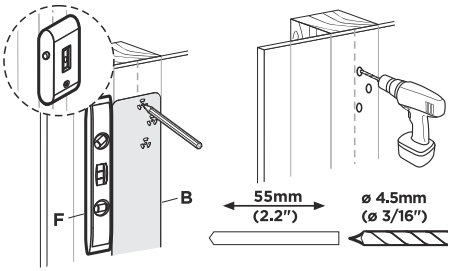

Reverse Installation

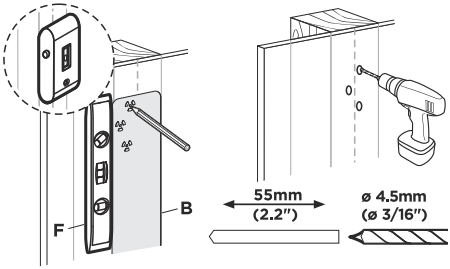

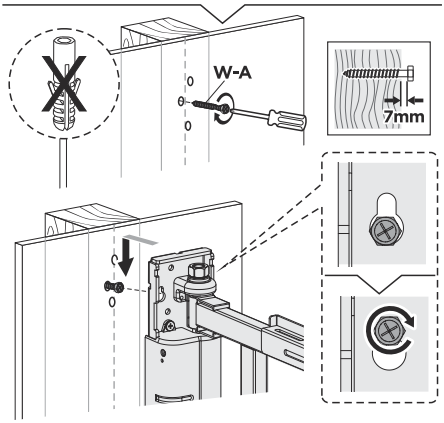

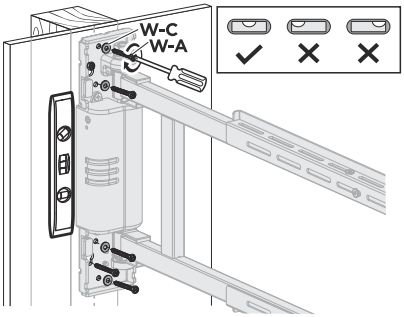

Forward Installation

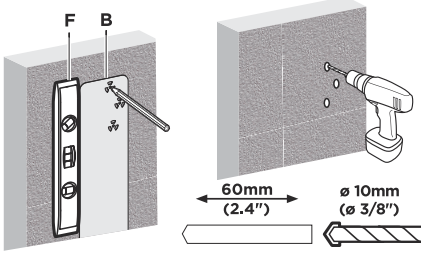

Reverse Installation

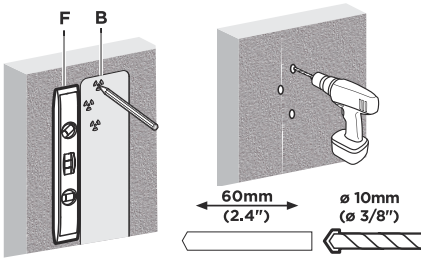

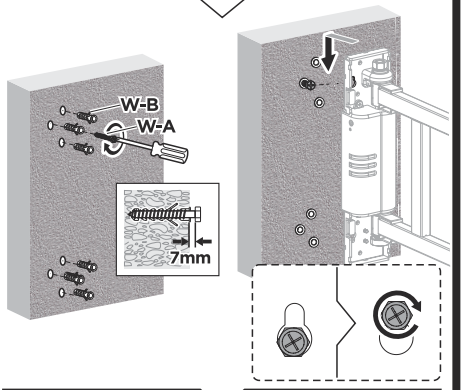

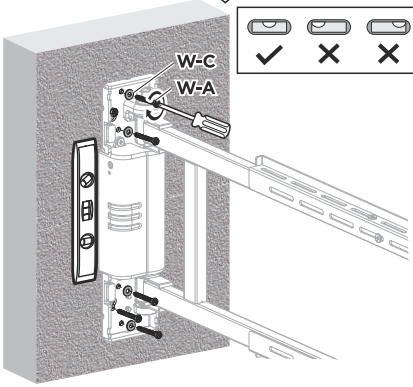

3.

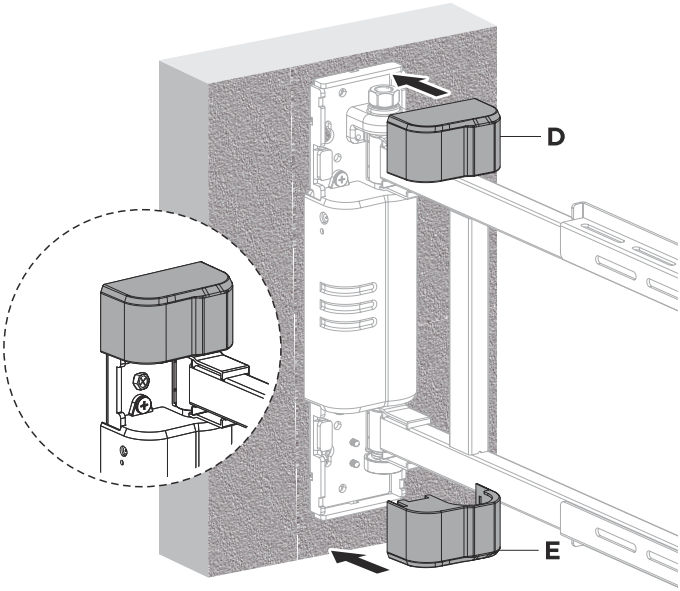

4.

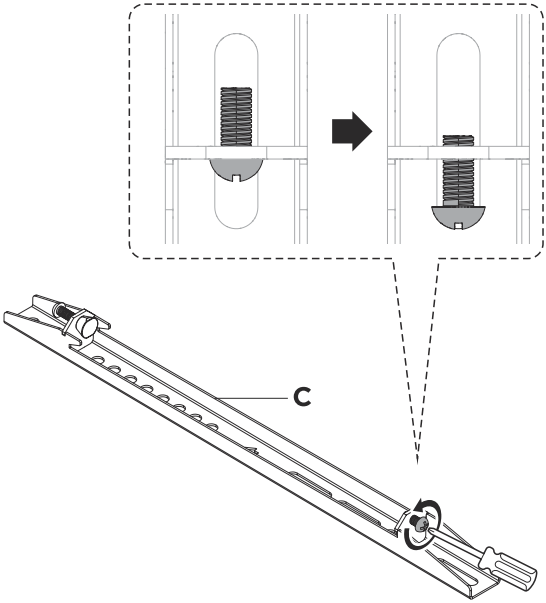

5.

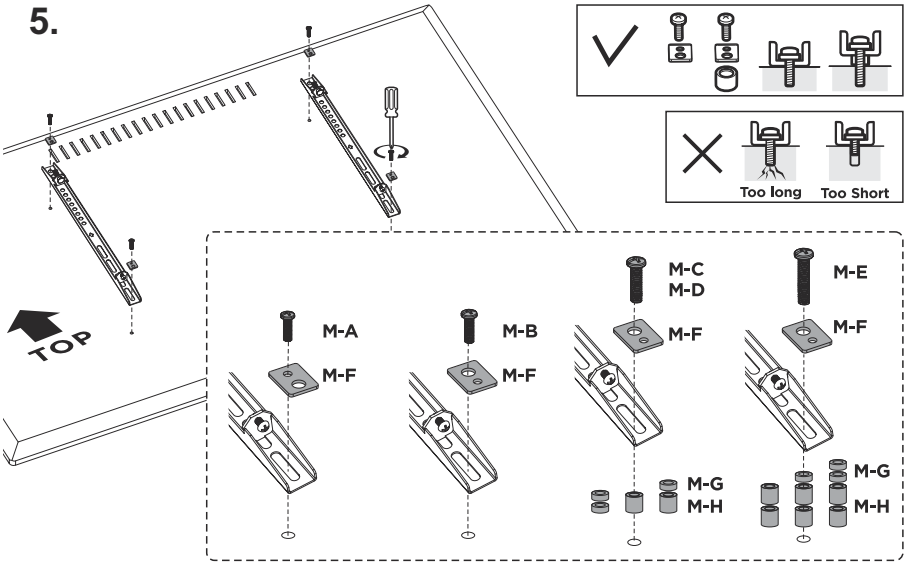

6.

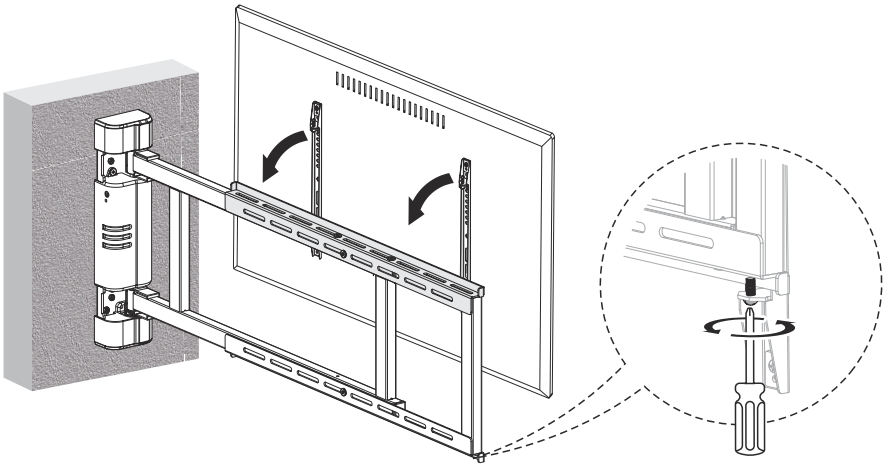

7.

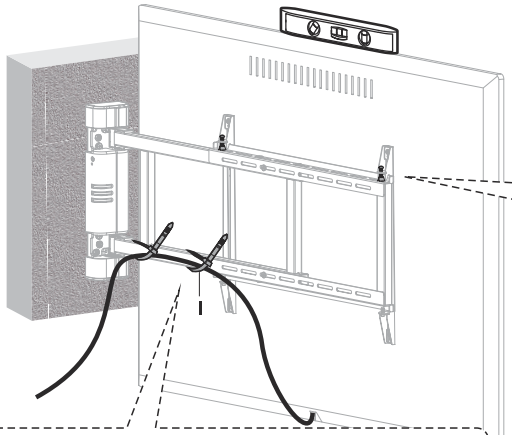

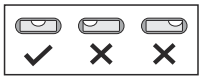

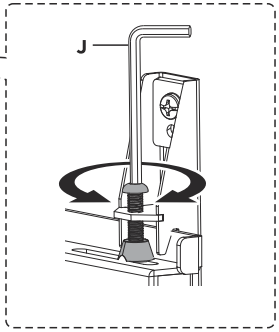

Connect the cables to your
TV and route through the cable clips.
Note: *Leave slack in the cables for arm movement.*

8.

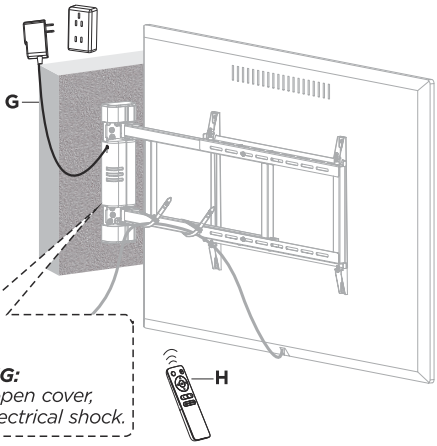

⚠

WARNING:
Do not *open cover,*
risk of electrical shock.

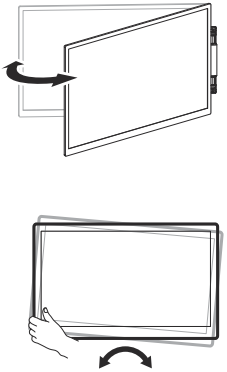

The Remote Control Operation Instructions

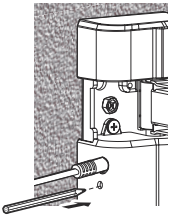

1 Pairing the Remote to the Mount

STEP 1:
Apply power, and then using a pin or other small item (such as a paperclip) press the code button located on the side of the TV Mount. You will hear a "beep" sound after pressing the code button.

STEP 2:
Press SET, you will hear a series of "beep" sounds for 10 seconds, the remote control is now successfully paired to the TV Mount.

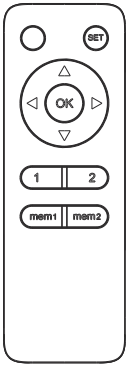

RMT-01
romote control

2 Resetting the System

Press and hold OK for 5 seconds. The system will start moving automatically, the TV wall mount will move to a 0 degrees position and then stop with a beep sound, which indicates that you successfully reset the system.

3 Storing a TV Mount Position in Memory 1

When the TV Mount is in the desired position, press and hold mem1 for 2 seconds - you will hear a single"beep" sound indicating the position has been successfully saved in Location 1 of the Remote Control.

4 Storing a TV Mount Position in Memory 2

When the TV Mount is in the desired position press and hold mem2 for 2 seconds - you will hear a single "beep" sound indicating the position has been successfully saved in Location 2 of the Remote Control.

5 To recall the first saved position, press 1, the TV wall mount will automatically swivel to the location 1 position.

6 To recall the second saved position, press 2, the TV wall mount will automatically swivel to the location 2 position.

7 Press and release ◁, the TV wall mount will swivel to the left, press OK to stop.

8 Press and release ▷, the TV wall mount will swivel to the right, press OK to stop.

9 The TV wall mount can be installed on two directions (normal or reverse installation). When you find the swivel direction of the TV wall mount is different from the direction button you pressed, set the remote control by following the process: press and hold △ for 5 seconds until you hear beep sound, the remote control is now successfully set to operate the mount.

10 Increase the swivel range:

The default swivel range of the TV mount is 0°~90°.
If you want a swivel range more than 90°, follow the process:

Step 1: Adjust the TV wall mount to your desired position manually.
Step 2: Press and hold mem1 for 5 seconds until the buzzer sounds one beep. Repeat this step five times until you hear the buzzer make a "beep beep" (2 beeps), this new swivel range is now successfully saved.

Note: *The max swivel range is 170°.*

Error Indications:

Over-current Protection: The buzzer makes a "beep beep" (2 beeps) once
Sensor indicates the mount is over range: The buzzer makes a "beep beep" (2 beeps) twice
Sensor indicates an operating fault: The buzzer makes a "beep beep" (2 beeps) three times
Unit senses abnormal power: The buzzer makes a "beep beep" (2 beeps) four times

In Front

This repair guide intents to help you identify and solve the minor problems caused by unusual operation of the electric system of our electric TV mounts. The simple procedures in this manual are easy to follow and capable of solving the most problems happened in everyday use.

Error Indication

1. The Buzzer Constantly Gives Out Alarm Sound: The Error Of Positioning Signal

Reset the system by following the instruction manual. If the alarm sound continues, please contact us to replace the product.

Remote Control Problems

1. Abnormal Loss Of Power

(Normally Batteries Are Out Of Power After 24hrs Without Using The Remote Control.)

Please contact us to replace remote control.

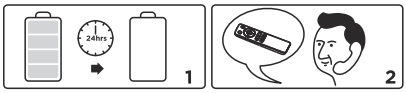

2. Buttons On Remote Control Don't Work.

Please check if the batteries have power. If the problem isn't solved, please contact us to replace the remote control. If the problem is still not solved after the replacement, please contact us to replace the product.

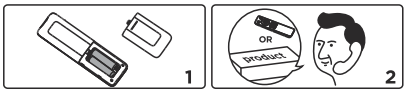

3. The Insensitivity Of Remote Control

Please replace the batteries. If the problem is still not solved, please contact us to replace remote control.

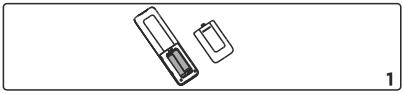

Abnormal Operation: The TV Mount Can't Be Adjusted To 0° Or 170°

Please reset the system by following the instruction manual. If the problem is still not solved, please contact us to replace the product.

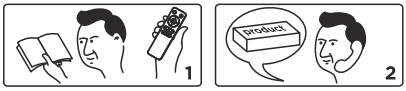

Can't Operate

Please check if the power adaptor is properly connected to the product. If so, please turn the power on. If there is no buzzer sound or red light power indication, please check if the power adaptor works properly. If the power adaptor doesn't work, please contact us to replace the power adaptor. If the power adaptor works properly, but the TV mount doesn't work, please contact us to replace the product.

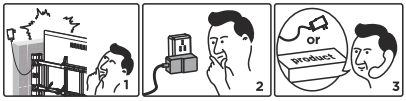

Abnormal Noise

Please contact us to replace the product.

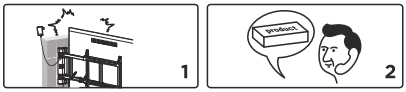

Motor Can't Stop/Anti-Collision Mechanism Slips
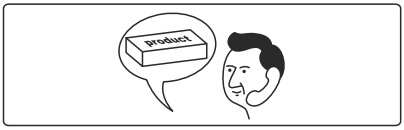
Please contact us to replace the product.