BE248CFN
Series LCD Monitor
User Guide

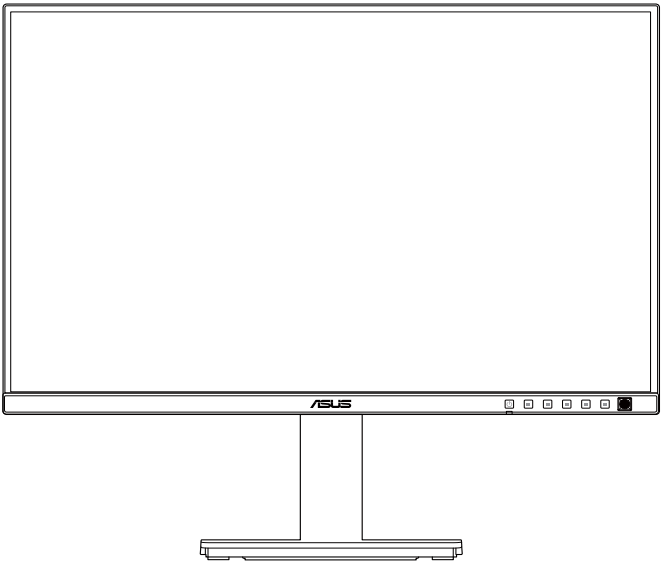

HIGH-DEFINITION MULTIMEDIA INTERFACE

First Edition

September 2024

Copyright © 2024 ASUSTeK COMPUTER INC. All Rights Reserved.

No part of this manual, including the products and software described in it, may be reproduced, transmitted, transcribed, stored in a retrieval system, or translated into any language in any form or by any means, except documentation kept by the purchaser for backup purposes, without the express written permission of ASUSTeK COMPUTER INC. (“ASUS”).

Product warranty or service will not be extended if: (1) the product is repaired, modified or altered, unless such repair, modification of alteration is authorized in writing by ASUS; or (2) the serial number of the product is defaced or missing.

ASUS PROVIDES THIS MANUAL “AS IS” WITHOUT WARRANTY OF ANY KIND, EITHER EXPRESS OR IMPLIED, INCLUDING BUT NOT LIMITED TO THE IMPLIED WARRANTIES OR CONDITIONS OF MERCHANTABILITY OR FITNESS FOR A PARTICULAR PURPOSE. IN NO EVENT SHALL ASUS, ITS DIRECTORS, OFFICERS, EMPLOYEES OR AGENTS BE LIABLE FOR ANY INDIRECT, SPECIAL, INCIDENTAL, OR CONSEQUENTIAL DAMAGES (INCLUDING DAMAGES FOR LOSS OF PROFITS, LOSS OF BUSINESS, LOSS OF USE OR DATA, INTERRUPTION OF BUSINESS AND THE LIKE), EVEN IF ASUS HAS BEEN ADVISED OF THE POSSIBILITY OF SUCH DAMAGES ARISING FROM ANY DEFECT OR ERROR IN THIS MANUAL OR PRODUCT.

SPECIFICATIONS AND INFORMATION CONTAINED IN THIS MANUAL ARE FURNISHED FOR INFORMATIONAL USE ONLY, AND ARE SUBJECT TO CHANGE AT ANY TIME WITHOUT NOTICE, AND SHOULD NOT BE CONSTRUED AS A COMMITMENT BY ASUS. ASUS ASSUMES NO RESPONSIBILITY OR LIABILITY FOR ANY ERRORS OR INACCURACIES THAT MAY APPEAR IN THIS MANUAL, INCLUDING THE PRODUCTS AND SOFTWARE DESCRIBED IN IT.

Products and corporate names appearing in this manual may or may not be registered trademarks or copyrights of their respective companies, and are used only for identification or explanation and to the owners’ benefit, without intent to infringe.

Contents

Contents iii
Notices iv
TCO certified vi
Safety information vii
Care & Cleaning viii
Takeback Services ix
Product information for EU energy label ix

Chapter 1: Product introduction

1.1 Welcome! 1-1
1.2 Package contents 1-1
1.3 Monitor introduction 1-2
1.3.1 Front view 1-2
1.3.2 Back view 1-4
1.3.3 Other Function(s) 1-5

Chapter 2: Setup

2.1 Assembling the monitor arm/base 2-1
2.2 Detaching the arm/base (for VESA wall mount) 2-2
2.3 Installing the Mini PC Kit 2-3
2.4 Adjusting the monitor 2-4
2.5 Connecting the cables 2-5
2.6 Turning on the monitor 2-6

Chapter 3: General instructions

3.1 OSD (On-Screen Display) menu 3-1
3.1.1 How to reconfigure 3-1
3.1.2 OSD function introduction 3-2
3.2 Specifications summary 3-10
3.3 Outline dimensions 3-12
3.4 Troubleshooting (FAQ) 3-13
3.5 Supported operating modes 3-14

Notices

Federal Communications Commission Statement

This device complies with Part 15 of the FCC Rules. Operation is subject to the following two conditions:

- This device may not cause harmful interference, and
- This device must accept any interference received including interference that may cause undesired operation.

This equipment has been tested and found to comply with the limits for a Class B digital device, pursuant to Part 15 of the FCC Rules. These limits are designed to provide reasonable protection against harmful interference in a residential installation. This equipment generates, uses and can radiate radio frequency energy and, if not installed and used in accordance with the instructions, may cause harmful interference to radio communications. However, there is no guarantee that interference will not occur in a particular installation. If this equipment does cause harmful interference to radio or television reception, which can be determined by turning the equipment off and on, the user is encouraged to try to correct the interference by one or more of the following measures:

- Reorient or relocate the receiving antenna.
- Increase the separation between the equipment and receiver.
- Connect the equipment into an outlet on a circuit different from that to which the receiver is connected.
- Consult the dealer or an experienced radio/TV technician for help.

The use of shielded cables for connection of the monitor to the graphics card is required to assure compliance with FCC regulations. Changes or modifications to this unit not expressly approved by the party responsible for compliance could void the user's authority to operate this equipment.

ENERGY STAR complied product

ENERGY STAR is a joint program of the U.S. Environmental Protection Agency and the U.S. Department of Energy helping us all save money and protect the environment through energy efficient products and practices.

All ASUS products with the ENERGY STAR logo comply with the ENERGY STAR standard, and the power management feature is enabled by default. The monitor and computer are automatically set to sleep after 10 and 30 minutes of user inactivity. To wake your computer, click the mouse or press any key on the keyboard. Please visit http://www.energystar.gov/powermanagement for detail information on power management and its benefits to the environment. In addition, please visit http://www.energystar.gov for detail information on the ENERGY STAR joint program.

NOTE: Energy Star is NOT supported on FreeDOS and Linux-based operating system.

Canadian Department of Communications Statement

This digital apparatus does not exceed the Class B limits for radio noise emissions from digital apparatus set out in the Radio Interference Regulations of the Canadian Department of Communications.

This class B digital apparatus complies with Canadian ICES-003.

This Class B digital apparatus meets all requirements of the Canadian Interference - Causing Equipment Regulations.

Cet appareil numérique de la classe B respecte toutes les exigences du Réglement sur le matériel brouiller du Canada.

Software Low Blue Light compliance

ASUS requests every model to pass SW LBL when “Image/ Blue Light Filter” is set to MAX.

Please refer to the following to alleviate eye strains:

- Users should take some time away from the display if working for long hours. It is advised to take short breaks (at least 5 mins) after around 1 hour of continuous working at the computer. Taking short and frequent breaks is more effective than a single longer break.
- To minimize eye strain and dryness in your eyes, users should rest the eye periodically by focusing on objects that are far away.
- Eye exercises can help to reduces eye strain. Repeat these exercises often. If eye strain continues please consult a physician. Eye exercise: (1) Repeating look up and down (2) Slowly roll your eyes (3) Move your eyes diagonal.
- High energy blue ligh may lead to eye strain and AMD (Age-Related Macular Degeneration). Blue light Filter to reduce 70% (max.) harmful blue light to avoiding CVS (Computer Vision Syndrome).

Blue Light Filter set to MAX. It is in compliance with TÜV Rheinland low blue light Software Solution certification.

Flicker-Free technology

The Monitor adopts Flicker-Free technology, which clears the eye visible flicker, brings comfort viewing experience and preventing users suffer from eye strain and fatigue.

TCO certified

A third-party certification according to ISO 14024

Toward sustainable IT products

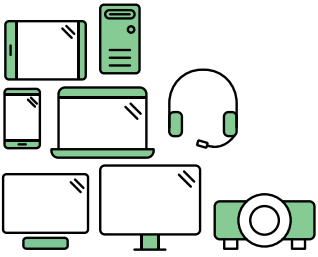

Say hello to a more sustainable product

IT products are associated with a wide range of sustainability risks throughout their life cycle. Human rights violations are common in the factories. Harmful substances are used both in products and their manufacture. Products can often have a short lifespan because of poor ergonomics, low quality and when they are not able to be repaired or upgraded.

This product is a better choice. It meets all the criteria in TCO Certified, the world's most comprehensive sustainability certification for IT products. Thank you for making a responsible product choice, that help drive progress towards a more sustainable future!

Criteria in TCO Certified have a life-cycle perspective and balance environmental and social responsibility. Conformity is verified by independent and approved verifiers that specialize in IT products, social responsibility or other sustainability issues. Verification is done both before and after the certificate is issued, covering the entire validity period. The process also includes ensuring that corrective actions are implemented in all cases of factory non-conformities. And last but not least, to make sure that the certification and independent verification is accurate, both TCO Certified and the verifiers are reviewed regularly.

Want to know more?

Read information about TCO Certified, full criteria documents, news and updates at **tcocertified.com.** On the website you'll also find our Product Finder, which presents a complete, searchable listing of certified products.

Safety information

- Before setting up the monitor, carefully read all the documentation that came with the package.
- To prevent fire or shock hazard, never expose the monitor to rain or moisture.
- Never try to open the monitor cabinet. The dangerous high voltages inside the monitor may result in serious physical injury.
- If the power supply is broken, do not try to fix it by yourself. Contact a qualified service technician or your retailer.
- Before using the product, make sure all cables are correctly connected and the power cables are not damaged. If you detect any damage, contact your dealer immediately.
- Slots and openings on the back or top of the cabinet are provided for ventilation. Do not block these slots. Never place this product near or over a radiator or heat source unless proper ventilation is provided.
- The monitor should be operated only from the type of power source indicated on the label. If you are not sure of the type of power supply to your home, consult your dealer or local power company.
- Use the appropriate power plug which complies with your local power standard.
- Do not overload power strips and extention cords. Overloading can result in fire or electric shock.
- Avoid dust, humidity, and temperature extremes. Do not place the monitor in any area where it may become wet. Place the monitor on a stable surface.
- Unplug the unit during a lightning storm or if it will not be used for a long period of time. This will protect the monitor from damage due to power surges.
- Never push objects or spill liquid of any kind into the slots on the monitor cabinet.
- To ensure satisfactory operation, use the monitor only with UL listed computers which have appropriate configured receptacles marked between 100-240V AC.
- By means of a power cord connected to a socket-outlet with earthing connection.
- If you encounter technical problems with the monitor, contact a qualified service technician or your retailer.
- Adjustment of the volume control as well as the equalizer to other settings than the center position may increase the ear-/headphones output voltage and therefore the sound pressure level.

This symbol of the crossed out wheeled bin indicates that the product (electrical, electronic equipment, and mercury-containing button cell battery) should not be placed in municipal waste. Please check local regulations for disposal of electronic products.

AEEE yönetmeliğine uygundur

Care & Cleaning

- Before you lift or reposition your monitor, it is better to disconnect the cables and power cord. Follow the correct lifting techniques when positioning the monitor. When lifting or carrying the monitor, grasp the edges of the monitor. Do not lift the display by the stand or the cord.
- Cleaning. Turn your monitor off and unplug the power cord. Clean the monitor surface with a lint-free, non-abrasive cloth. Stubborn stains may be removed with a cloth dampened with mild cleaner.
- Avoid using a cleaner containing alcohol or acetone. Use a cleaner intended for use with the monitor. Never spray cleaner directly on the screen, as it may drip inside the monitor and cause an electric shock.

The following symptoms are normal with the monitor:

- You may find slightly uneven brightness on the screen depending on the desktop pattern you use.
- When the same image is displayed for hours, an afterimage of the previous screen may remain after switching the image. The screen will recover slowly or you can turn off the Power Switch for hours.
- When the screen becomes black or flashes, or cannot work anymore, contact your dealer or service center to fix it. Do not repair the screen by yourself!

Conventions used in this guide

WARNING: Information to prevent injury to yourself when trying to complete a task.

CAUTION: Information to prevent damage to the components when trying to complete a task.

IMPORTANT: Information that you MUST follow to complete a task.

NOTE: Tips and additional information to aid in completing a task.

Where to find more information

Refer to the following sources for additional information and for product and software updates.

1. **ASUS websites**

   The ASUS websites worldwide provide updated information on ASUS hardware and software products. Refer to http://www.asus.com

2. **Optional documentation**

   Your product package may include optional documentation that may have been added by your dealer. These documents are not part of the standard package.

Takeback Services

ASUS recycling and takeback programs come from our commitment to the highest standards for protecting our environment. We believe in providing solutions for our customers to be able to responsibly recycle our products, batteries and other components as well as the packaging materials.

Please go to http://csr.asus.com/english/Takeback.htm for detail recycling information in different region.

Product information for EU energy label

BE248CFN

1.1 Welcome!

Thank you for purchasing the ASUS® LCD monitor!

The latest widescreen LCD monitor from ASUS provides a broader, brighter and crystal-clear display, plus a host of features that enhance your viewing experience.

With these features, you can enjoy the convenience and delightful visual experience that the monitor brings to you!

1.2 Package contents

Check your package for the following items:

- ✓ LCD monitor
- ✓ Monitor base
- ✓ Quick start guide
- ✓ Warranty card
- ✓ Power cord
- ✓ HDMI cable (optional)
- ✓ DisplayPort cable
- ✓ USB C to C cable (optional)
- ✓ USB C to A cable (optional)
- ✓ Mini PC kit (optional)

If any of the above items is damaged or missing, contact your retailer immediately.

If you need to replace the power cord or the connection cable(s), please contact ASUS customer service.

1.3 Monitor introduction

1.3.1 Front view

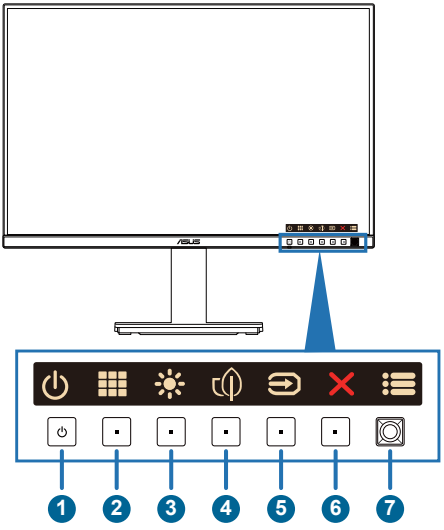

1. Power button/power indicator
   - The color definition of the power indicator is as the below table.

Status	Description
White	On
Amber	Standby mode
Off	Off

2. Shortcut 3
   - Press this button to display the OSD menu when the OSD is off.
   - Default: QuickFit hotkey
   - To change the hotkey function, go to the Shortcut > Shortcut 3 menu.
3. Shortcut 2
   - Press this button to display the OSD menu when the OSD is off.
   - Default: Brightness hotkey
   - To change the hotkey function, go to the Shortcut > Shortcut 2 menu.

4. Shortcut 1
   - Press this button to display the OSD menu when the OSD is off.
   - Default: Energy Saving hotkey
   - To change the hotkey function, go to the Shortcut > Shortcut 1 menu.
5. Signal button:
   - Press this button to display the OSD menu when the OSD is off.
   - Press this button to switch to next active input source (if available).
6. Exit button:
   - Press this button to display the OSD menu when the OSD is off.
   - Exits the OSD menu.
7. Menu (5-way) button:
   - Press this button to display the OSD menu when the OSD is off. Press this button again to enter the OSD main menu.
   - Enacts the selected OSD menu items.
   - Increases/Decreases values or moves your selection up/down/left/right.
   - Push the 5-way button down for over 5 seconds to toggle the Key Lock function between on and off.

1.3.2 Back view

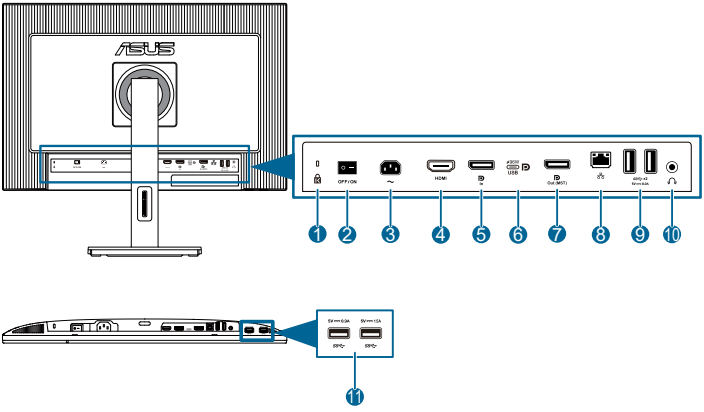

1. **Kensington lock slot**.
2. **Power switch**: Press the switch to turn on/off power.
3. **AC-IN port**: This port connects the power cord.
4. **HDMI port**: This port is for connection with an HDMI compatible device.
5. **DisplayPort in**: This port is for connection with a DisplayPort compatible device.
6. **USB 3.2 Gen 1 Type-C**: This port is for connection with a USB upstream cable. The connection supports USB power and data delivery.

> This monitor is Super-Speed USB 3.2 Gen 1 compatible(5Gbps). The port offer 96W power delivery with output voltage of 5V/3A, 9V/3A, 12V/3A 15V/3A, 20V/4.8A.

7. **Daisy-Chain DisplayPort output**: This port allows you to connect multiple DisplayPort compatible monitors.
8. **RJ45**: This port is for connecting Internet.
9. **USB 3.2 Gen 1 Type-A**: These ports are for connection with USB devices, such as USB keyboard/mouse, USB flash drive, etc.
10. **Earphone jack**: This port is only available when an HDMI/DisplayPort/USB Type-C cable is connected.
11. **USB 3.2 Gen 1 Type-A**: These ports are for connection with USB devices, such as USB keyboard/mouse, USB flash drive, etc.

1.3.3 Other Function(s)

1. Daisy chaining (for selected models)

The monitor supports daisy chain on DisplayPort and USB Type-C. Daisy Chaining allows up to 4 monitors to be connected in series with the video signal being passed from the source to a monitor (when the input source is 1920 x 1200@60Hz and no USB-C device is connected). In order to enable daisy chaining, please make sure the source transported.

To activate this function, you need to do the following: When MST or SST mode is On, turn off HDR mode.

This function is only available when Power Saving is Normal Level. If you set Power Saving to Deep Level, all the connected monitors will display the same content at the same time (clone). Note: Input port will be fixed (no auto detection) when DP out cable is plugged.

1920 x 1200 @60Hz

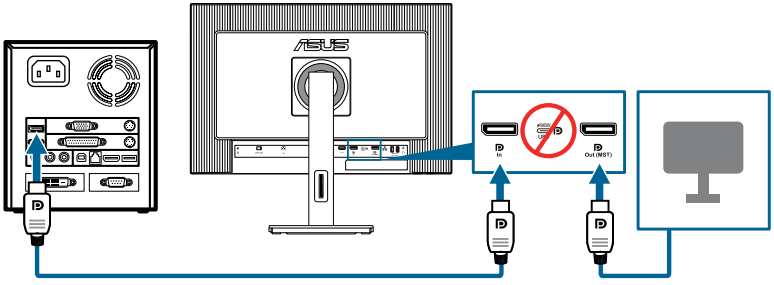

1920 x 1200 @60Hz

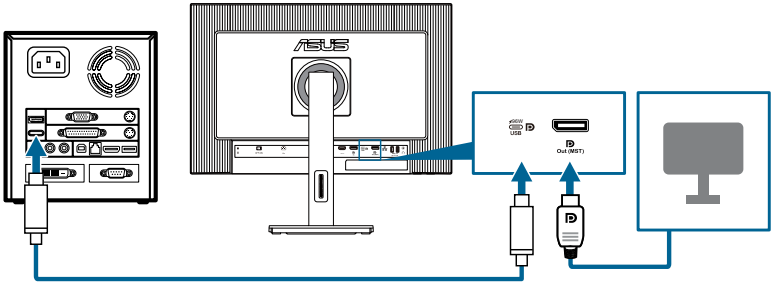

2.1 Assembling the monitor arm/base

To assemble the monitor base:

1. Attach the arm into the VESA cover.
2. With the sound "tick" that they complete assemble.
3. Have the front of the monitor face down on a table, slide the tabs on the arm into the slots on the VESA cover.
4. Press down the arm assembly to snap it into place.
5. Attach the base into the arm, making sure the tab on the arm fits into the groove on the base.
6. Fix the base to the arm by fastening the bundled screw.

We recommend that you cover the table surface with soft cloth to prevent damage to the monitor.

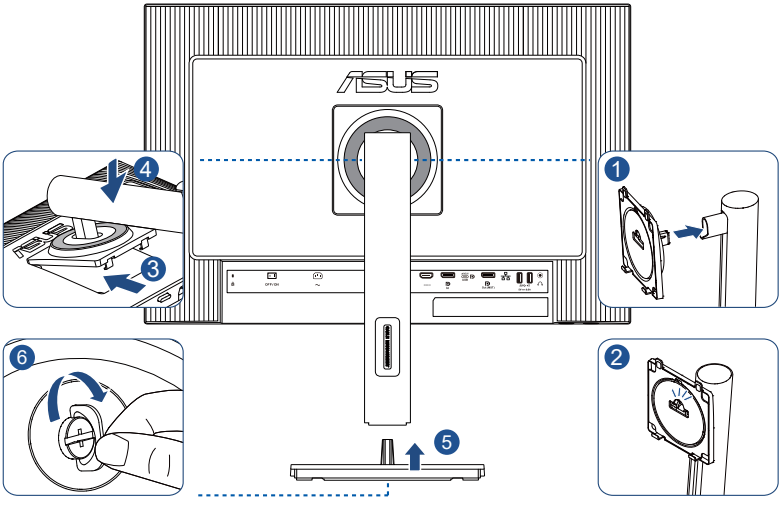

Base screw size: M6 x 15 mm.

2.2 Detaching the arm/base (for VESA wall mount)

The detachable arm/base of this monitor is specially designed for VESA wall mount.

To detach the arm/base:

1. Have the front of the monitor face down on a table.
2. Press the release button, and then detach the arm/base from the monitor (Figure 1).

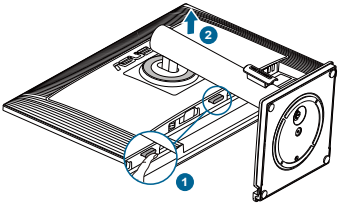

We recommend that you cover the table surface with soft cloth to prevent damage to the monitor.

- The VESA wall mount kit (100 x 100 mm) is purchased separately.
- Use only with UL/CSA/GS Listed Wall Mount Bracket with minimum weight/load bearing capacity of 5.93 kg (13.08 lb) (Screw size: M4 x 10 mm).

2.3 Installing the Mini PC Kit

The installation method is as follows:

1. Fixed the base with your hand and lift the cable holder upwards (Figure 1).
2. Left the cable holder (Figure 2).
3. Install the Mini PC Kit to the Column with hook (Figure 3).
4. Put the Mini PC Kit down to lock them up (Figure 4).

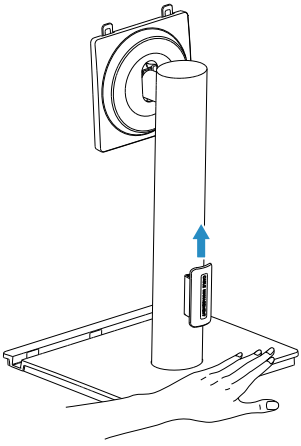

(Figure 1)

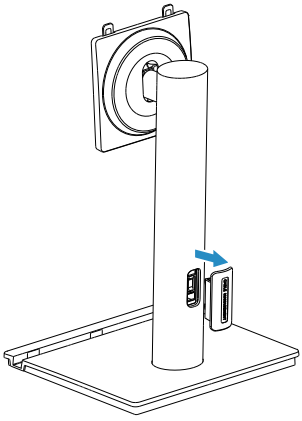

(Figure 2)

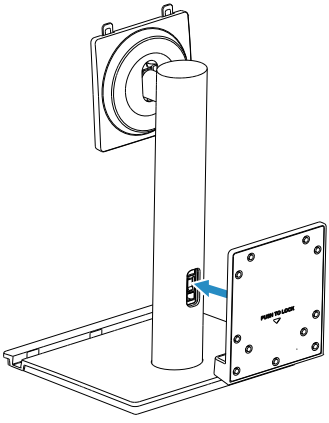

(Figure 3)

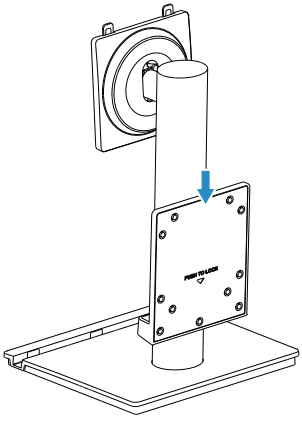

(Figure 4)

2.4 Adjusting the monitor

- For optimal viewing, we recommend that you look at the full face of the monitor, then adjust the monitor to the angle that is most comfortable for you.
- Hold the stand to prevent the monitor from falling when you change its angle.
- You can adjust the monitor's angle from +35˚ to -5˚, ±180˚ swivel adjustment from either left or right, and it allows ±90˚ pivot adjustment. You can also adjust the monitor's height within ±130 mm.

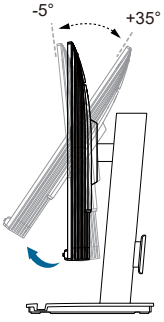

(Tilt)

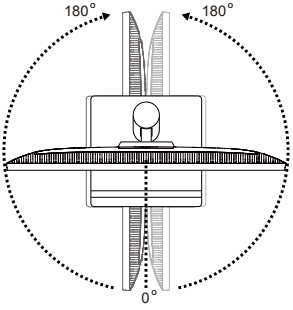

(Swivel)

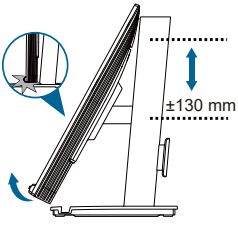

(Height adjustment)

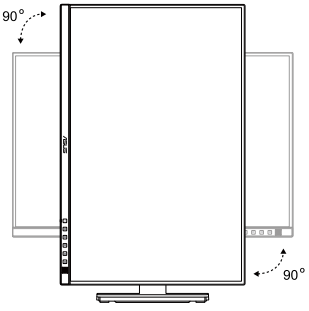

(Pivot)

To adjust the monitor's height, you need to do the following:

- Make the monitor straightly downward firstly.
- Tilt the monitor to the maximum angle.
- You can adjust the monitor to minimum height.

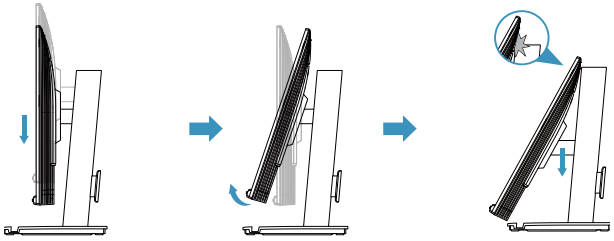

It is normal that the monitor slightly shakes while you adjust the viewing angle.

2.5 Connecting the cables

Connect the cables as the following instructions:

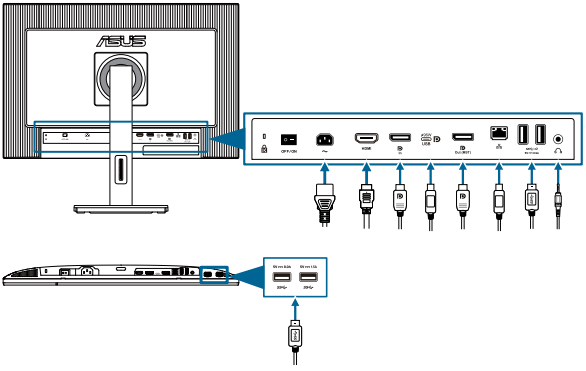

- **To connect the power cord**: Connect one end of the power cord securely to the monitor's AC input port, the other end to a power outlet.
- **To use the HDMI port**: Connects the HDMI cable to a source device such as a computer or game console.
- **To use the DisplayPort connector**: Connects the DisplayPort cable to a source device, such as a computer or game console.
- **To use the USB Type-C ports**: Connect the USB Type-C cable to a source device such as a computer or game console. The USB Type-C. Power delivery 20V/4.8A, 15V/3A, 12V/3A, 9V/3A , 5V/3A.
- **To use the RJ45**: Connects a network cable.
- **To use the USB 3.2 Gen 1 ports**: Connect a USB cable to a peripheral device, such as a keyboard, mouse, or USB hard drive.

When these cables are connected, you can choose the desired signal from the **Input** item in the OSD menu.

If you need to replace the power cord or the connection cable(s), please contact ASUS customer service.

- **To use the earphone**: Connect the end with plug type to the monitor's earphone jack when an HDMI/DisplayPort/USB Type-C signal is fed.

2.6 Turning on the monitor

Press the power button ⏻ . See page 1-2 for the location of the power button. The power indicator ⏻ lights up in white to show that the monitor is ON.

3.1 OSD (On-Screen Display) menu

3.1.1 How to reconfigure

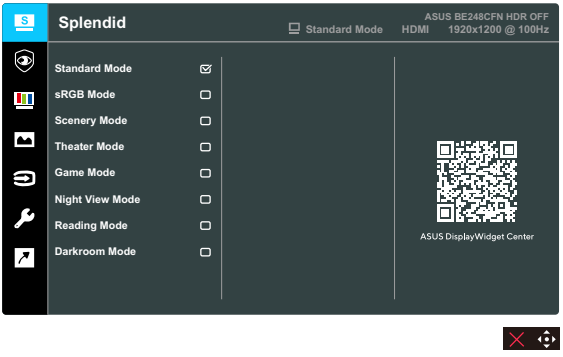

1. Press any button to display the OSD menu.
2. Press the Menu (5-way) button to enter the OSD main menu.
3. Move the Menu (5-way) button up/down/left/right to navigate through the functions. Highlight the desired function and press the Menu (5-way) button to activate it. If the function selected has a sub-menu, move the Menu (5-way) button up/down to navigate through the sub-menu functions. Highlight the desired sub-menu function and press the Menu (5-way) button or move the Menu (5-way) button to activate it.
4. Move the Menu (5-way) button up/down to change the settings of the selected function.
5. To exit and save the OSD menu, press the button or move the Menu (5-way) left repeatedly until the OSD menu disappears. To adjust other functions, repeat steps 1-4.

3.1.2 OSD function introduction

1. Splendid

This function contains 8 sub-functions you can select for your preference. Each mode has the Reset selection, allowing you to maintain your setting or return to the preset mode.

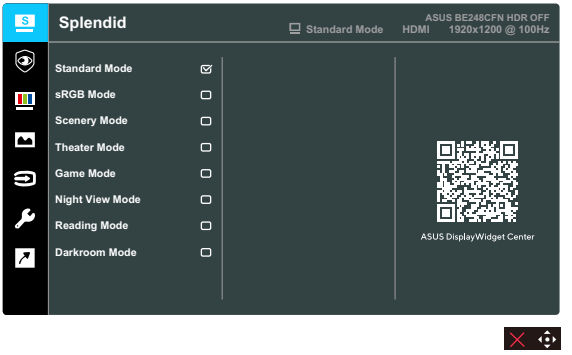

- **Standard Mode**: Best choice for document editing with Splendid Video Enhancement.

Standard Mode meets Energy Star® requirements.

- **sRGB Mode**: Best choice for viewing photos and graphics from PCs.
- **Scenery Mode**: Best choice for scenery photo display with Splendid Video Enhancement.
- **Theater Mode**: Best choice for movies with Splendid Video Enhancement.
- **Game Mode**: Best choice for game playing with Splendid Video Enhancement.
- **Night View Mode**: Best choice for dark-scene games or movies with Splendid Video Enhancement.
- **Reading Mode**: This is the best choice for book reading.
- **Darkroom Mode**: This is the best choice for a weak ambient light environment.

- In the Standard mode, the following function(s) are not user-configurable: Saturation, Sharpness, ASCR.
- In the sRGB mode, the following function(s) are not user-configurable: Brightness, Contrast, Saturation, Color Temp., Sharpness, ASCR.
- In the Reading mode, the following function(s) are not user-configurable: Contrast, Saturation, Color Temp., ASCR.

2. Eye Care

In this function, you can adjust settings to better protect your eyes.

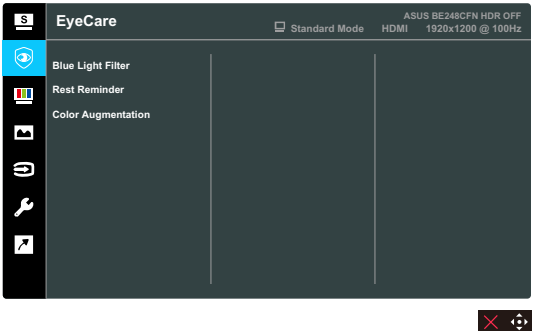

- **Blue Light Filter**: In this function, you can adjust the blue light filter from 0 to Max.
  - * **0**: No change.
  - * **Max**: The higher the level, the less blue light is scattered. When blue light filter is activated, the default settings of Standard Mode will be automatically imported. Besides maximum level, the brightness is user-configurable. Maximum is the optimized setting. The brightness function is not user configurable.

Please refer to the following to alleviate eye strains:

- Users should take some time away from the display if working for long hours. It is advised to take short breaks (at least 5 mins) after around 1 hour of continuous working at the computer. Taking short and frequent breaks is more effective than a single longer break.
- To minimize eye strain and dryness in your eyes, users should rest the eye periodically by focusing on objects that are far away.
- Eye exercises can help to reduces eye strain. Repeat these exercises often. If eye strain continues please consult a physician. Eye exercises: (1) Repeating look up and down (2) Slowly roll your eyes (3) Move your eyes diagonal.
- High energy blue light may lead to eye strain and AMD (Age-Related Macular Degeneration). Blue light filter to reduce 70% (max.) harmful blue light to avoiding CVS (Computer Vision Syndrome) when the user adjusts blue light filter bar to maximum level.

- **Rest Reminder**: This function provides you a rest reminder according to how long you set for your working time. For example, if you set a 30-minute working time and there will be a pop up reminder appeared on the upper left corner of the monitor for 5 seconds when time is up. Press any key to make this reminder OSD disappear.

When this function is enabled, the following functions are not available: Splendid Demo Mode, QuickFit.

- **Color Augmentation**: The adjusting range of color enhancement is from 0 to 100.

This function is not available when sRGB Mode is selected in the Splendid menu.

3. Color

Set a desired color setting from this menu.

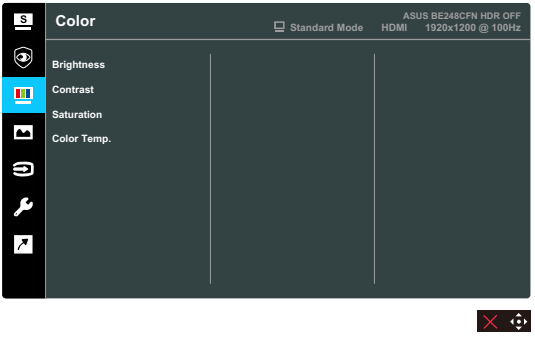

- **Brightness**: The adjusting range is from 0 to 100.
- **Contrast**: The adjusting range is from 0 to 100.
- **Saturation**: The adjusting range is from 0 to 100.
- **Color Temp.**: Contains 4 modes including **Cool**, **Normal**, **Warm** and **User Mode**.

4. Image

Set the image related setting from this menu.

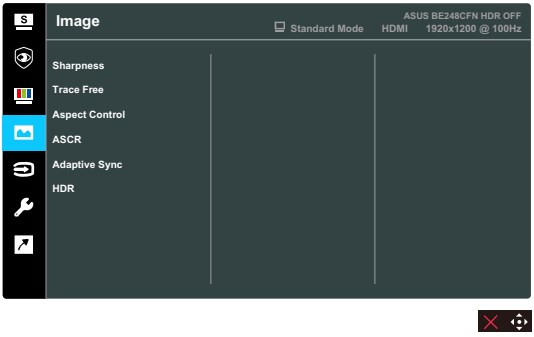

- **Sharpness**: The adjusting range is from 0 to 100.
- **Trace Free**: Adjusts the response time of the monitor.
- **Aspect Control**: Adjusts the aspect ratio to **Full**, **1:1 Ratio** or **Dot to Dot** .
- **ASCR**: Turns on/off the ASCR (ASUS Smart Contrast Ratio) function.
- **Adaptive-Sync**: It can allow a Adaptive-Sync supported graphics source to dynamically adjust display refresh rate based on typical content frame rates for power efficient, virtually stutter free and low-latency display update.

This function is not available when Motion Sync is enabled.

- **HDR**: High Dynamic Range. Contains three HDR modes (**PQ Optimized, PQ Clip**, and **PQ Basic**).

5. Input

In this function, you can select your desired input source.

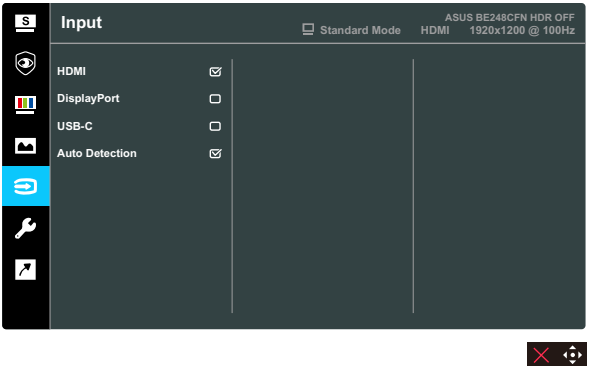

- **Auto Detection**: automatically detects other active signals when current input signal is inactive.

To activate this function, you need to do the following: remove the connection of Daisy-Chain DisplayPort output (to disable MST output).

6. System Setup

Allows you to adjust the system.

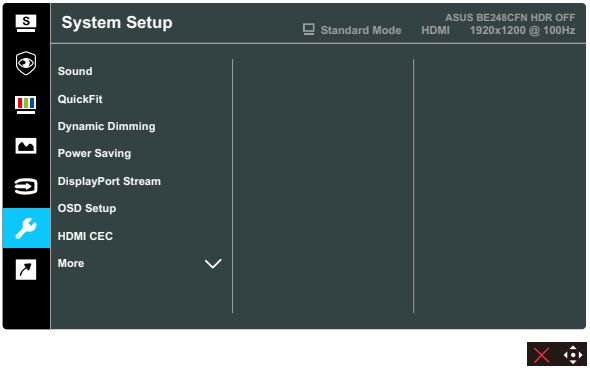

- **Sound:**
  - * Adjusts **Volume** from 0 to 100.
  - * **Mute** or **un-Mute** the audio output.
- **QuickFit**: You can have a preview of the document or photo layout directly on screen without printing test copies.
- **Dynamic Dimming**: Synchronizes with contents while contrast changing to execute backlight dynamic dimming. You can adjust the synchronization speed as "**On**" or "**Off**".
- **Power Saving**: Select **Normal Level** for power on hub during power saving. Select **Deep Level** for power off hub during power saving.

To activate daisy chaining, you need to do the following: set Power Saving to Normal Level. Note: Input port will be fixed (no auto detection) when DP out cable is plugged.

- **DisplayPort Stream**: Compatibility with graphic card. Select **DisplayPort 1.2**, **DisplayPort 1.4** or **DisplayPort 1.4 + USB 3.2** by graphic card DP version.

To activate daisy chaining, you need to do the following: set Power Saving to Normal Level. Note: Input port will be fixed (no auto detection) when DP out cable is plugged.

- **OSD Setup**:
  - * Adjusts the **OSD Timeout** from 10 to 120 seconds.
  - * Enables or disables the **DDC/CI** function.
  - * Adjusts the OSD background from **Opaque** to **Transparent**.
- **HDMI CEC**: Enables or disables the HDMI CEC function. To activate this function, please enable this function of the monitor via HDMI port.

Please take a look at the ASUS website to check which devices are compatible with this function.
To enable monitor to turn on and off the hardware or vise versa, please set up your computer BIOS by the following.

- BIOS set up instruction for ASUS NUC:

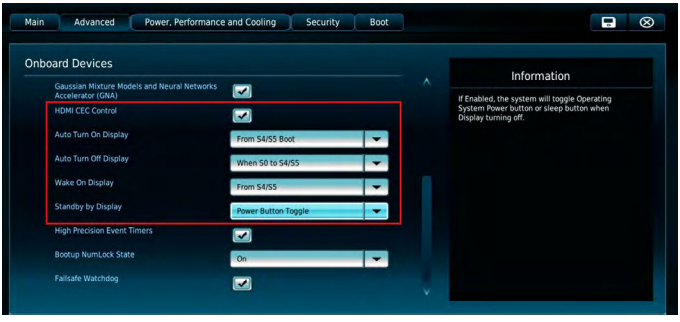

- BIOS set up instruction for ASUS Mini PC:

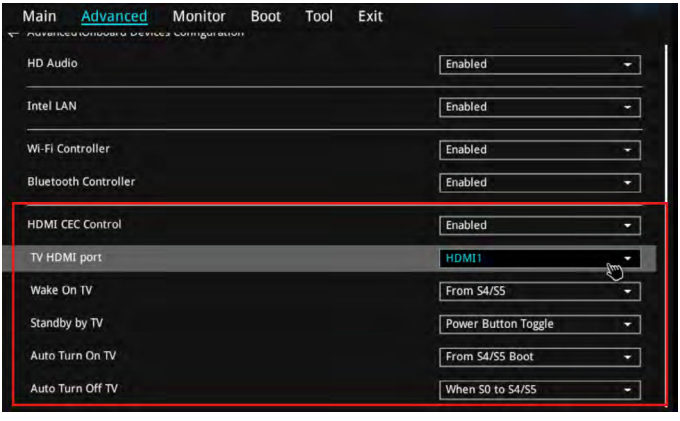

- **Language**: There are 23 languages for your selection, including English, French, German, Italian, Spanish, Dutch, Portuguese, Russian, Czech, Croatian, Polish, Romanian, Hungrian, Turkish, Simplified Chinese, Traditional Chinese, Japanese, Korean, Thai, Indonesian, Persian, Ukrainian, Vietnamese.
- **Key Lock**: To disable all function keys. Push the 5-way button down for over 5 seconds to cancel the key lock function.
- **Information**: Shows the monitor information.
- **Power Indicator**: Turns the power LED indicator on/off.
- **Power Key Lock**: Enables or disables the power key.
- **All Reset**: “Yes” allows you to restore the default settings.

7. Shortcut

Defines the functions for Shortcut 1, 2 and 3 buttons.

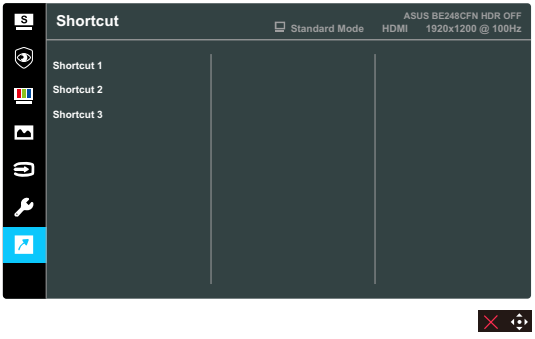

- **Shortcut 1/Shortcut 2/Shortcut 3**: Selects a function for Shortcut 1, 2 and 3 buttons.

When a certain function is selected or activated, your shortcut key may not support. Available function choices for shortcut: Blue Light Filter, Splendid, Brightness, Contrast, Input, Color Temp., Volume, QuickFit, Rest Reminder, Color Augmentation, Energy Saving.

3.2 Specifications summary

Panel Type	TFT LCD
Panel size	24.1” (16:10, 61.13 cm) wide screen
Max. Resolution	1920 x 1200
Pixel pitch	0.2700 mm x 0.2700 mm
Brightness (Typ.)	350 cd/m^2
Contrast Ratio (Typ.)	1300:1
Viewing angle (H/V) CR>10	178˚/178˚
Display colors	16.7 M (RGB 6 bit + Hi-FRC)
Response time	5 ms (GTG)
ProArt Preset selection	8 color preset modes
Auto adjustment	No
Color temperature selection	4 color temperatures
Analog input	No
Digital input	DisplayPort v1.4, HDMI 1.4, USB Type-C
Digital Output	DisplayPort v1.4
Earphone jack	Yes
Audio input	No
Speaker (Built-in)	2 W x 2 (4 ohm)
USB 3.2 Gen 1 port	4 x USB 3.2 Gen 1 Type-A
Colors	Black
Power LED	White (On)/Amber (Standby)
Tilt	+35˚~ -5˚
Pivot	+90˚~ -90˚
Swivel	+180˚~ -180˚
Height Adjustment	130 mm
Kensington lock	Yes
AC input voltage	AC: 100~240V
Power consumption	Power On: 14.85 W**, Standby: ≤ 0.5 W (Typ.), Power Off: 0 W (AC Switch off)
Temperature (Operating)	0˚C~40˚C
Temperature (Non-operating)	-20˚C~+60˚C
Dimension (W x H x D) without stand	531.81 mm x 350.03 mm x 40.0 mm
Dimension (W x H x D) with stand	531.81 mm x 473.09 mm x 211.2 mm (highest) 531.81 mm x 343.09 mm x 211.2 mm (lowest) 610 mm x 414 mm x 140 mm (package)
Weight (Esti.)	5.8 kg (Net); 4.0 kg (Net, without stand); 8.5 kg (Gross)

Multi-languages	23 languages (English, French, German, Italian, Spanish, Dutch, Portuguese, Russian, Czech, Croatian, Polish, Romanian, Hungarian, Turkish, Simplified Chinese, Traditional Chinese, Japanese, Korean, Thai, Indonesian, Persian, Ukrainian, Vietnamese)
Accessories	Quick start guide, warranty card, power cord, HDMI cable (optional), DisplayPort cable, USB C to C cable (optional), USB C to A cable (optional), Mini PC Kit (optional)
Compliance and Standards	cTUVus, FCC, ICES-3, EPEAT Gold, CB, CE, ErP, WEEE, EU Energy, TUV-GS, TUV-Ergo, ISO 9241-307, UkrSEPRO, Ukraine Energy, CU, CCC, CEL, RCM, VCCI, PC recycle, J-MOSS, KC, KCC, KMEPS, Energy Star®, TCO, RoHs, California CEC, Windows 10/11 WHQL, Flicker Free, Low Blue Light

***Specifications are subject to change without notice.**
****Power consumption of On Mode as defined in Energy Star 8.0 version.**

3.3 Outline dimensions

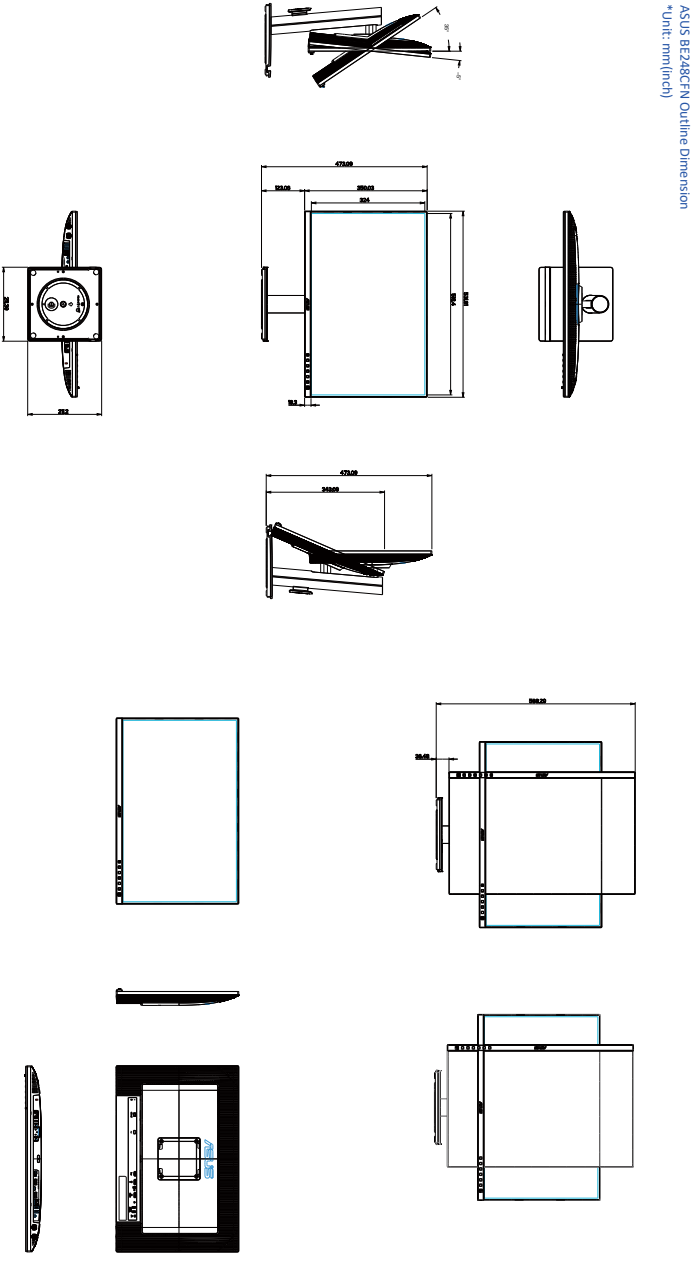

3.4 Troubleshooting (FAQ)

Problem	Possible Solution
Power LED is not ON	• Press the ⏻ button to check if the monitor is in the ON mode. • Check if the power cord is properly connected to the monitor and the power outlet. • Check if the power switch is ON.
The power LED lights amber and there is no screen image	• Check if the monitor and the computer are in the ON mode. • Make sure the signal cable is properly connected the monitor and the computer. • Inspect the signal cable and make sure none of the pins are bent. • Connect the computer with another available monitor to check if the computer is properly working.
Screen image is too light or dark	• Adjust the Contrast and Brightness settings via OSD.
Screen image bounces or a wave pattern is present in the image	• Make sure the signal cable is properly connected to the monitor and the computer. • Move electrical devices that may cause electrical interference.
Screen image has color defects (white does not look white)	• Inspect the signal cable and make sure that none of the pins are bent. • Perform All Reset via OSD. • Adjust the R/G/B color settings or select the Color Temperature via OSD.
No sound or sound is low	• Ensure that the HDMI/DisplayPort/USB Type C cable is properly connected to the monitor and the computer. • Adjust the volume settings of both your monitor and HDMI/DisplayPort/USB Type C device. • Ensure that the computer sound card driver is properly installed and activated.

3.5 Supported operating modes

Resolution Frequency	Horizontal Frequency (KHz)	Vertical Frequency (Hz)	Pixel (MHz)
640x480	31.47(N)	59.94(N)	25.18
640x480	35.00(N)	66.66(N)	30.24
640x480	37.87(N)	72.82(N)	31.5
640x480	37.5(N)	75.00(N)	31.5
720x400	31.47(N)	70.08(P)	28.32
800x600	35.16(P)	56.25(P)	36
800x600	37.88(P)	60.32(P)	40
800x600	46.86(P)	75.00(P)	49.5
832X624	49.72(P/N)	74.55(P/N)	57.28
1024x768	48.36(N)	60.00(N)	65
1024x768	56.476(N)	70.069(N)	75
1024x768	60.02(N)	75.00(N)	78.75
1152x864	67.5(P/N)	75.00(P/N)	108
1280x720	45.00(P)	60.00(N)	75.25
1280x768	47.78(P)	60.00(N)	79.5
1280x800	49.7(P)	60.00(N)	83.5
1280x960	60.00(P)	60.00(N)	108
1280x1024	63.98(P)	60.02(P)	108
1280x1024	79.98(P)	75.02(P)	135
1366x768	47.712(P)	59.79(P)	85.5
1440x900	55.94(N)	59.89(P)	106.5
1600x1200	75.00(P)	60.00(P)	162
1680x1050	65.29(N)	60.00(P)	146.25
1920x1080	67.5(P)	60.00(P)	148.5
1920x1200 (Reduced Blanking)	74.038(P)	59.95(N)	154
1920x1080	113.22	100	235.5
1920x1200	125.72	100	261.5

"P" / "N" stands for "Positive" / "Negative" polarity of incoming H-sync/V-sync (input timing).

When the monitor is operating in the video mode (ie, not displaying data), the following high definition modes shall be supported in addition to standard definition video.

Resolution	Vertical Frequency (Hz)
1920 x 1080p	23.98Hz
	24Hz
	25Hz
	29.97Hz
	30Hz
	50Hz
	59.94Hz
	60Hz
	100Hz
1280 x 720p	50Hz
	59.94Hz
	60Hz
720 x 576p	50Hz
720 x 480p	59.94Hz
	60Hz
640 x 480p	59.94Hz
	60Hz