VU34WCIP Series LCD Monitor

User Guide

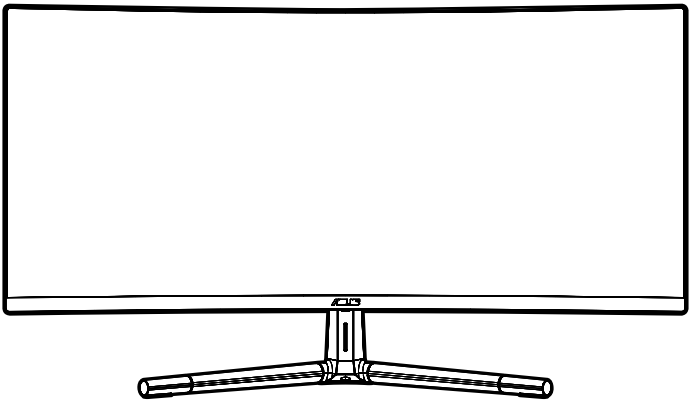

HIGH-DEFINITION MULTIMEDIA INTERFACE

First Edition

January 2025

Copyright © 2025 ASUSTeK COMPUTER INC. All Rights Reserved.

No part of this manual, including the products and software described in it, may be reproduced, transmitted, transcribed, stored in a retrieval system, or translated into any language in any form or by any means, except documentation kept by the purchaser for backup purposes, without the express written permission of ASUSTeK COMPUTER INC. (“ASUS”).

Product warranty or service will not be extended if: (1) the product is repaired, modified or altered, unless such repair, modification of alteration is authorized in writing by ASUS; or (2) the serial number of the product is defaced or missing.

ASUS PROVIDES THIS MANUAL “AS IS” WITHOUT WARRANTY OF ANY KIND, EITHER EXPRESS OR IMPLIED, INCLUDING BUT NOT LIMITED TO THE IMPLIED WARRANTIES OR CONDITIONS OF MERCHANTABILITY OR FITNESS FOR A PARTICULAR PURPOSE. IN NO EVENT SHALL ASUS, ITS DIRECTORS, OFFICERS, EMPLOYEES OR AGENTS BE LIABLE FOR ANY INDIRECT, SPECIAL, INCIDENTAL, OR CONSEQUENTIAL DAMAGES (INCLUDING DAMAGES FOR LOSS OF PROFITS, LOSS OF BUSINESS, LOSS OF USE OR DATA, INTERRUPTION OF BUSINESS AND THE LIKE), EVEN IF ASUS HAS BEEN ADVISED OF THE POSSIBILITY OF SUCH DAMAGES ARISING FROM ANY DEFECT OR ERROR IN THIS MANUAL OR PRODUCT.

SPECIFICATIONS AND INFORMATION CONTAINED IN THIS MANUAL ARE FURNISHED FOR INFORMATIONAL USE ONLY, AND ARE SUBJECT TO CHANGE AT ANY TIME WITHOUT NOTICE, AND SHOULD NOT BE CONSTRUED AS A COMMITMENT BY ASUS. ASUS ASSUMES NO RESPONSIBILITY OR LIABILITY FOR ANY ERRORS OR INACCURACIES THAT MAY APPEAR IN THIS MANUAL, INCLUDING THE PRODUCTS AND SOFTWARE DESCRIBED IN IT.

Products and corporate names appearing in this manual may or may not be registered trademarks or copyrights of their respective companies, and are used only for identification or explanation and to the owners’ benefit, without intent to infringe.

Contents

Contents iii
Notices iv
TCO certified vi
Safety information vii
Care & Cleaning viii
Takeback Services ix
Product information for EU energy label ix

Chapter 1: Product introduction

1.1 Welcome! 1-1
1.2 Package contents 1-1
1.3 Monitor introduction 1-2
1.3.1 Front view 1-2
1.3.2 Back view 1-4

Chapter 2: Setup

2.1 Assembling the monitor arm/base 2-1
2.2 Detaching the arm/base (for VESA wall mount) 2-2
2.3 Adjusting the monitor 2-3
2.4 Connecting the cables 2-4
2.5 Turning on the monitor 2-5

Chapter 3: OSD (On-Screen Display) Menu

3.1 OSD (On-Screen Display) menu 3-1
3.1.1 How to reconfigure 3-1
3.1.2 OSD function introduction 3-2
3.2 Specifications summary 3-10
3.3 Outline dimensions 3-12
3.4 Troubleshooting (FAQ) 3-13
3.5 Supported operating modes 3-14

Notices

Federal Communications Commission Statement

This device complies with Part 15 of the FCC Rules. Operation is subject to the following two conditions:

- This device may not cause harmful interference, and
- This device must accept any interference received including interference that may cause undesired operation.

This equipment has been tested and found to comply with the limits for a Class B digital device, pursuant to Part 15 of the FCC Rules. These limits are designed to provide reasonable protection against harmful interference in a residential installation. This equipment generates, uses and can radiate radio frequency energy and, if not installed and used in accordance with the instructions, may cause harmful interference to radio communications. However, there is no guarantee that interference will not occur in a particular installation. If this equipment does cause harmful interference to radio or television reception, which can be determined by turning the equipment off and on, the user is encouraged to try to correct the interference by one or more of the following measures:

- Reorient or relocate the receiving antenna.
- Increase the separation between the equipment and receiver.
- Connect the equipment into an outlet on a circuit different from that to which the receiver is connected.
- Consult the dealer or an experienced radio/TV technician for help.

The use of shielded cables for connection of the monitor to the graphics card is required to assure compliance with FCC regulations. Changes or modifications to this unit not expressly approved by the party responsible for compliance could void the user's authority to operate this equipment.

ENERGY STAR® complied product

ENERGY STAR is a joint program of the U.S. Environmental Protection Agency and the U.S. Department of Energy helping us all save money and protect the environment through energy efficient products and practices.

All ASUS products with the ENERGY STAR® logo comply with the ENERGY STAR® standard, and the power management feature is enabled by default. The monitor and computer are automatically set to sleep after 10 and 30 minutes of user inactivity. To wake your computer, click the mouse or press any key on the keyboard. Please visit http://www.energystar.gov/powermanagement for detail information on power management and its benefits to the environment. In addition, please visit http://www.energystar.gov for detail information on the ENERGY STAR® joint program.

As an ENERGY STAR® partner, we have determined that this product meets the ENERGY STAR® guidelines for energy efficiency.
This product qualifies for ENERGY STAR® in the default setting. Changing the default setting or enabling other features could exceed the limits necessary to qualify for ENERGY STAR®. Refer to ENERGYSTAR.gov for more information about the ENERGY STAR® program.

NOTE: Energy Star is NOT supported on FreeDOS and Linux-based operating system.

Canadian Department of Communications Statement

This digital apparatus does not exceed the Class B limits for radio noise emissions from digital apparatus set out in the Radio Interference Regulations of the Canadian Department of Communications.

This class B digital apparatus complies with Canadian ICES-003.

This Class B digital apparatus meets all requirements of the Canadian Interference - Causing Equipment Regulations.

Cet appareil numérique de la classe B respecte toutes les exigences du Réglement sur le matériel brouiller du Canada.

Software Low Blue Light compliance

This monitor complies with TUV Rheinland (Software Solution) standards. Set the Blue Light Filter to its highest level to enter low blue light mode.

Decreases the blue light emitted from the display to reduce the risk of blue light exposure to your eyes.

- Place the screen 20 - 28 inches [50 - 70 cm] away from your eyes and a little below eye level.
- Consciously blinking your eyes every now and then will help to reduce eye strain after extended screen time.
- Take breaks for 20 minutes every 2 hours.
- Look away from the screen and gaze at a distant object for at least 20 seconds during breaks.
- Make stretches to relieve body fatigue or pain during breaks.

Flicker-Free technology

The Monitor adopts Flicker-Free technology, which clears the eye visible flicker, brings comfort viewing experience and preventing users suffer from eye strain and fatigue.

TCO certified

A third-party certification according to ISO 14024

Toward sustainable IT products

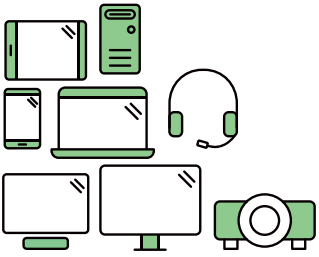

Say hello to a more sustainable product

IT products are associated with a wide range of sustainability risks throughout their life cycle. Human rights violations are common in the factories. Harmful substances are used both in products and their manufacture. Products can often have a short lifespan because of poor ergonomics, low quality and when they are not able to be repaired or upgraded.

This product is a better choice. It meets all the criteria in TCO Certified, the world's most comprehensive sustainability certification for IT products. Thank you for making a responsible product choice, that help drive progress towards a more sustainable future!

Criteria in TCO Certified have a life-cycle perspective and balance environmental and social responsibility. Conformity is verified by independent and approved verifiers that specialize in IT products, social responsibility or other sustainability issues. Verification is done both before and after the certificate is issued, covering the entire validity period. The process also includes ensuring that corrective actions are implemented in all cases of factory non-conformities. And last but not least, to make sure that the certification and independent verification is accurate, both TCO Certified and the verifiers are reviewed regularly.

Want to know more?

Read information about TCO Certified, full criteria documents, news and updates at tcocertified.com. On the website you'll also find our Product Finder, which presents a complete, searchable listing of certified products.

Safety information

- Before setting up the monitor, carefully read all the documentation that came with the package.
- To prevent fire or shock hazard, never expose the monitor to rain or moisture.
- Never try to open the monitor cabinet. The dangerous high voltages inside the monitor may result in serious physical injury.
- If the power supply is broken, do not try to fix it by yourself. Contact a qualified service technician or your retailer.
- Before using the product, make sure all cables are correctly connected and the power cables are not damaged. If you detect any damage, contact your dealer immediately.
- Slots and openings on the back or top of the cabinet are provided for ventilation. Do not block these slots. Never place this product near or over a radiator or heat source unless proper ventilation is provided.
- The monitor should be operated only from the type of power source indicated on the label. If you are not sure of the type of power supply to your home, consult your dealer or local power company.
- Use the appropriate power plug which complies with your local power standard.
- Do not overload power strips and extension cords. Overloading can result in fire or electric shock.
- Avoid dust, humidity, and temperature extremes. Do not place the monitor in any area where it may become wet. Place the monitor on a stable surface.
- Unplug the unit during a lightning storm or if it will not be used for a long period of time. This will protect the monitor from damage due to power surges.
- Never push objects or spill liquid of any kind into the slots on the monitor cabinet.
- To ensure satisfactory operation, use the monitor only with UL listed computers which have appropriate configured receptacles marked between 100-240V AC.
- By means of a power cord connected to a socket-outlet with earthing connection.
- If you encounter technical problems with the monitor, contact a qualified service technician or your retailer.
- Adjustment of the volume control as well as the equalizer to other settings than the center position may increase the ear-/headphones output voltage and therefore the sound pressure level.

This symbol of the crossed out wheeled bin indicates that the product (electrical, electronic equipment, and mercury-containing button cell battery) should not be placed in municipal waste. Please check local regulations for disposal of electronic products.

AEEE yönetmeliğine uygundur

Care & Cleaning

- Before you lift or reposition your monitor, it is better to disconnect the cables and power cord. Follow the correct lifting techniques when positioning the monitor. When lifting or carrying the monitor, grasp the edges of the monitor. Do not lift the display by the stand or the cord.
- Cleaning. Turn your monitor off and unplug the power cord. Clean the monitor surface with a lint-free, non-abrasive cloth. Stubborn stains may be removed with a cloth dampened with mild cleaner.
- Avoid using a cleaner containing alcohol or acetone. Use a cleaner intended for use with the monitor. Never spray cleaner directly on the screen, as it may drip inside the monitor and cause an electric shock.

The following symptoms are normal with the monitor:

- You may find slightly uneven brightness on the screen depending on the desktop pattern you use.
- When the same image is displayed for hours, an afterimage of the previous screen may remain after switching the image. The screen will recover slowly or you can turn off the Power Switch for hours.
- When the screen becomes black or flashes, or cannot work anymore, contact your dealer or service center to fix it. Do not repair the screen by yourself!

Conventions used in this guide

WARNING: Information to prevent injury to yourself when trying to complete a task.

CAUTION: Information to prevent damage to the components when trying to complete a task.

IMPORTANT: Information that you MUST follow to complete a task.

NOTE: Tips and additional information to aid in completing a task.

Where to find more information

Refer to the following sources for additional information and for product and software updates.

1. **ASUS websites**

   The ASUS websites worldwide provide updated information on ASUS hardware and software products. Refer to http://www.asus.com

2. **Optional documentation**

   Your product package may include optional documentation that may have been added by your dealer. These documents are not part of the standard package.

3. **About Flicker**

   https://www.asus.com/Microsite/display/eye_care_technology/

Takeback Services

ASUS recycling and takeback programs come from our commitment to the highest standards for protecting our environment. We believe in providing solutions for our customers to be able to responsibly recycle our products, batteries and other components as well as the packaging materials.

Please go to http://csr.asus.com/english/Takeback.htm for detail recycling information in different region.

Product information for EU energy label

VU34WCIP

Chapter 1: Product introduction

1.1 Welcome!

Thank you for purchasing the ASUS® LCD monitor!

The latest widescreen LCD monitor from ASUS provides a broader, brighter and crystal-clear display, plus a host of features that enhance your viewing experience.

With these features, you can enjoy the convenience and delightful visual experience that the monitor brings to you!

1.2 Package contents

Check your package for the following items:

- ✓ LCD monitor
- ✓ Monitor arm
- ✓ Monitor base
- ✓ Quick start guide
- ✓ Warranty card
- ✓ Power cord
- ✓ 4 M4x10 screws
- ✓ 1 M5x10 screw
- ✓ HDMI cable (optional)
- ✓ DisplayPort (DP) cable (optional)
- ✓ USB-C to USB-C cable (optional)
- ✓ L-shaped screwdriver (optional)

If any of the above items is damaged or missing, contact your retailer immediately.

If you need to replace the power cord or the connection cable(s), please contact ASUS customer service.

1.3 Monitor introduction

1.3.1 Front view

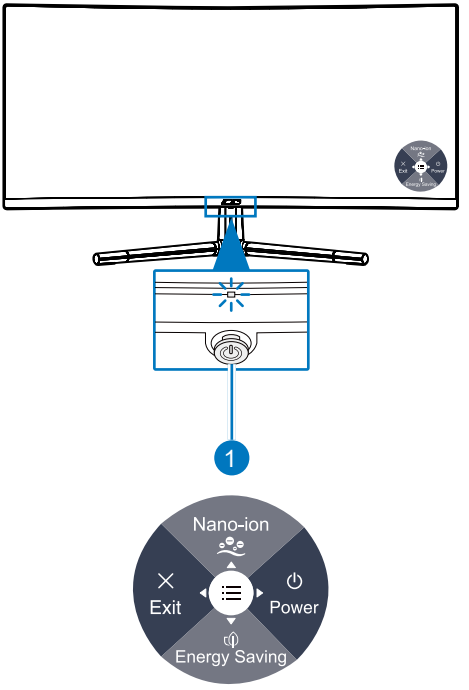

1. Power (5-way) joystick / Power indicator
   - Turns the monitor on/off.
   - Press the joystick once and then push it to the right to shut down the monitor.
   - The color definition of the power indicator is shown in the table below.

Status	Description
White	On
Breathing White/Amber	Air purifier activated
Amber	Standby mode
Off	Off

2. Shortcut 1
   - Press the joystick to display the OSD menu when the OSD is off.
   - Default: Nano-ion
   - To change the hotkey function, go to the Shortcut > Shortcut 1 menu.

3. Shortcut 2
   - Press the joystick to display the OSD menu when the OSD is off.
   - Default: Energy Saving hotkey
   - To change the hotkey function, go to the Shortcut > Shortcut 2 menu.

4. Exit button:
   - Press the joystick to display the OSD menu when the OSD is off.
   - Exits the OSD menu.

5. Menu:
   - Press the joystick to display the OSD menu when the OSD is off and then press this button again to enter the OSD main menu.
   - Enacts the selected OSD menu items.
   - Increases/Decreases values or moves your selection up/down/left/right.

1.3.2 Back view

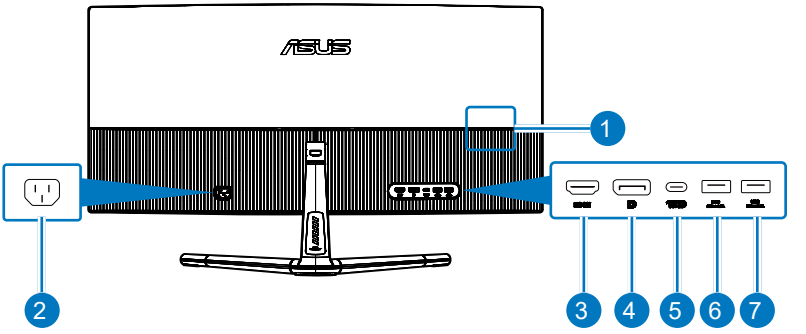

Top

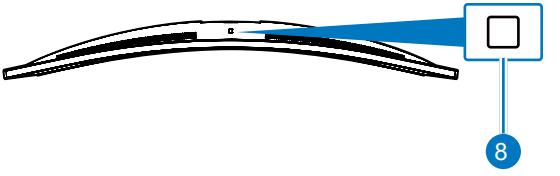

Bottom

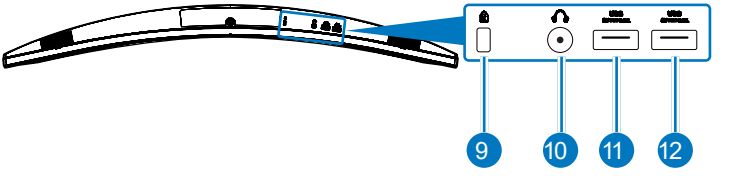

1. **Nano-ion air purifier vent**
2. **AC-IN port:** This port connects to the power cord.
3. **HDMI port:** This port is for connections with an HDMI compatible device.
4. **DisplayPort (DP) port**: This port is for connections with a DisplayPort compatible device.
5. **USB-C 3.2 Gen1 port:** Support DP Alt mode.

> The port supports 65W or 96W power delivery. When the USB-C port is set to 96W power delivery, the four USB-A ports will have no function and the monitor will display images with half of the original brightness and no sound.

6. **USB-A 3.0 port:** When the monitor is connected to a PC via the USB-C port, a USB hub can be connected to this port for various USB connections.
7. **USB-A 3.0 port:** When the monitor is connected to a PC via the USB-C port, a USB hub can be connected to this port for various USB connections.

8. **Ambient effect sensor:** Configures the ambient effect settings.
9. **Kensington lock slot**
10. **Earphone jack:** This port is only active when an HDMI/USB-C cable is connected to a compatible device.
11. **USB-A 3.0 port:** When the monitor is connected to a PC via the USB-C port, a USB hub can be connected to this port for various USB connections.
12. **USB-A 3.0 port:** When the monitor is connected to a PC via the USB-C port, a USB hub can be connected to this port for various USB connections.

This monitor is Super-Speed USB 3.2 Gen 1 compatible (5 Gbps). The USB-C port offers Max. 65W or 96W power delivery with output voltage 5V/3A, 9V/3A, 12V/3A, 15V/3A, 20V/3.25A, or 20V/4.5A (96W only). The user can select 65W or 96W from the “USB-C Charging” setting in the OSD menu. The default USB-C power delivery (PD) setting is 65W, you can switch to PD 96W via the “USB-C charging” setting (the USB hub and audio features will be disabled).

Chapter 2: Setup

2.1 Assembling the monitor arm/base

To assemble the monitor base:

1. Have the front of the monitor face down on a table, remove the VESA cover.
2. Place the arm hinge of the stand assembly onto its compartment on the rear of the monitor and then secure it with the four black M4x10 screws.
3. Attach the base onto the arm with the single black M5x10 screw.
4. Lock the screw, making sure the screw does not extend past the screw hole.
5. Assemble the VESA cover.

We recommend that you cover the table surface with a soft cloth to prevent damage to the monitor.

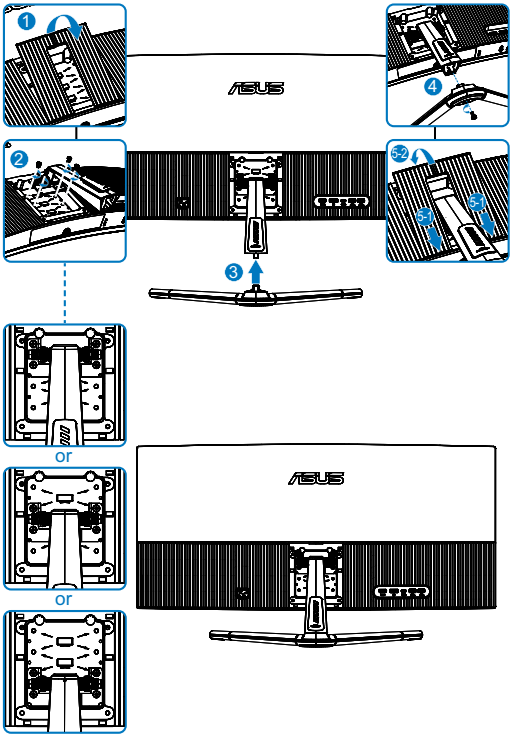

Base screw size: M5 x 10 mm

2.2 Detaching the arm/base (for VESA wall mount)

The detachable arm/base of this monitor is specially designed for VESA wall mounts.

To detach the arm/base:

1. Have the front of the monitor face down on a table, remove the VESA cover.
2. Use a screwdriver to remove the single black M5x10 screw from the base.
3. Remove the base.
4. Remove the four black M4x10 screws on the hinge, then remove the hinge.
5. Assemble the VESA cover.

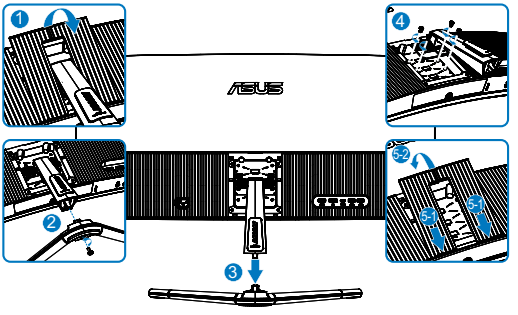

We recommend that you cover the table surface with soft cloth to prevent damage to the monitor.

- The VESA wall mount kit (100 x 100 mm) is purchased separately.
- Use only with UL/CSA/GS Listed Wall Mount Bracket with minimum weight/load bearing capacity of 22.7 kg (50 lb) (Screw size: Max. M4 x 9.5 mm).

2.3 Adjusting the monitor

- For optimal viewing, we recommend that you look at the full face of the monitor, then adjust the monitor to the angle that is most comfortable for you.
- Hold the stand to prevent the monitor from falling when you change its angle.
- The recommended adjusting angle is +23˚ to -5˚.

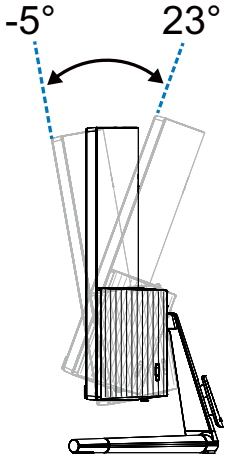

It is normal that the monitor slightly shakes while you adjust the viewing angle.

2.4 Connecting the cables

Connect the cables as the following instructions:

Rear

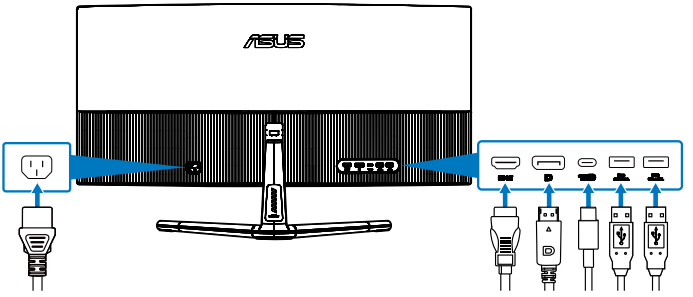

Bottom

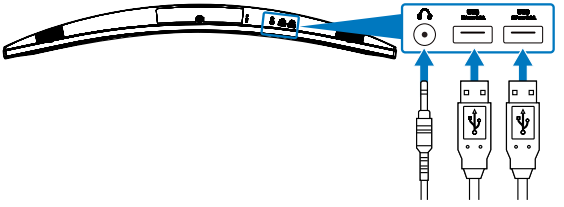

- **To connect the power cord:** Connect one end of the power cord securely to the monitor's AC input port, the other end to a power outlet.
- **To connect the HDMI/DisplayPort/USB-C cable:**
  a. Plug one end of the HDMI/DisplayPort/USB-C cable to the monitor's HDMI/DisplayPort/USB-C port.
  b. Connect the other end of the HDMI/DisplayPort/USB-C cable to your device's HDMI/DisplayPort/USB-C port.

It is suggested to use USB certified Type-C cables. If the signal source supports DP Alt mode, all video and audio can be transmitted.

- **To connect the USB-A cable:**
  a. First connect the monitor's USB-C port to a PC following the instructions above.
  b. Plug one end of the USB-A cable to one of the monitor's USB-A port.
  c. Connect the other end of the USB-A cable to the USB-A output port on a USB hub.
  d. Connect USB-A devices to the USB hub.
- **To use the earphone:** Connect the end with plug type to the monitor's earphone jack when an HDMI/DisplayPort/USB-C signal is fed.

When these cables are connected, you can choose the desired signal from the **Input** item in the OSD menu.

If you need to replace the power cord or the connection cable(s), please contact ASUS customer service.

2.5 Turning on the monitor

Press the power button ⏻. See page 1-2 for the location of the power button. The power indicator ⏻ lights up in white to show that the monitor is ON.

Chapter 3: OSD (On-Screen Display) Menu

3.1 OSD (On-Screen Display) menu

3.1.1 How to reconfigure

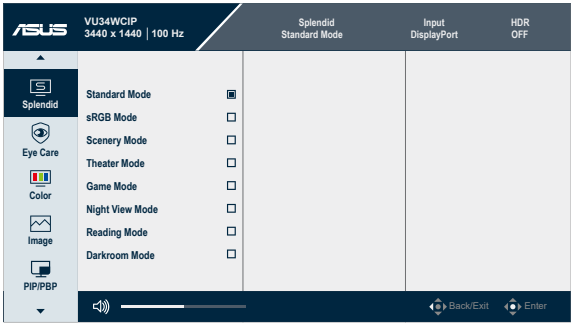

1. Press the 5-way joystick to display the OSD menu.
2. Press the Menu button to activate the OSD menu.
3. Press 5-way joystick as indicated on the screen to navigate through the functions. Highlight the desired function and press it again to activate it. If the function selected has a sub-menu, move the button up and down to navigate through the sub-menu functions. Highlight the desired sub-menu function and press it to activate it.
4. Move the 5-way joystick up and down to change the settings of the selected function.
5. To exit and save the OSD menu, move the 5-way joystick left repeatedly until the OSD menu disappears. To adjust other functions, repeat steps 1-4.

3.1.2 OSD function introduction

1. Splendid

This function contains 8 sub-functions you can select for your preference. Each mode has the Reset selection, allowing you to maintain your setting or return to the preset mode.

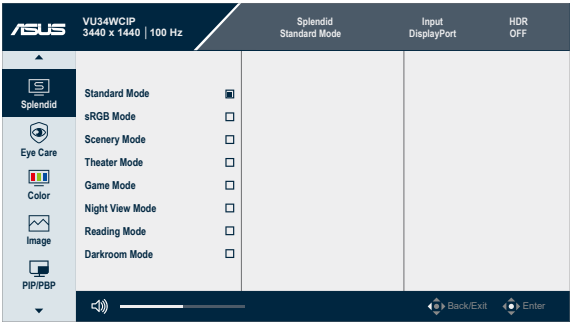

- **Standard Mode:** Best choice for document editing with Splendid Video Enhancement.

Standard Mode meets Energy Star® requirements.

- **sRGB Mode:** Best choice for viewing photos and graphics from PCs.
- **Scenery Mode:** Best choice for scenery photo display with Splendid Video Enhancement.
- **Theater Mode:** Best choice for movies with Splendid Video Enhancement.
- **Game Mode:** Best choice for game playing with Splendid Video Enhancement.
- **Night View Mode:** Best choice for dark-scene games or movies with Splendid Video Enhancement.
- **Reading Mode:** This is the best choice for book reading.
- **Darkroom Mode:** This is the best choice for a weak ambient light environment.

- In the Standard mode, the following function(s) are not user-configurable: Saturation, Sharpness, ASCR.
- In the sRGB mode, the following function(s) are not user-configurable: Brightness, Contrast, Saturation, Color Temp., Sharpness, ASCR.
- In the Reading mode, the following function(s) are not user-configurable: Contrast, Saturation, Color Temp., ASCR.

2. Eye Care

In this function, you can adjust settings to better protect your eyes.

- **Blue Light Filter:** In this function, you can adjust the blue light filter from 0 to Max.
  - * **0:** No change.
  - * **Max:** The higher the level, the less blue light is scattered. When blue light filter is activated, the default settings of Standard Mode will be automatically imported. Besides maximum level, the brightness is user-configurable. Maximum is the optimized setting. The brightness function is not user configurable.

To activate this function, you need to do the following: turn off Ambient Effect.

Please refer to the following to alleviate eye strains:

- Users should take some time away from the display if working for long hours. It is advised to take short breaks (at least 5 min.) after around 1 hour of continuous working at the computer. Taking short and frequent breaks is more effective than a single longer break.
- To minimize eye strain and dryness in your eyes, users should rest the eye periodically by focusing on objects that are far away.
- Eye exercises can help to reduces eye strain. Repeat these exercises often. If eye strain continues please consult a physician. Eye exercises: (1) Repeating look up and down (2) Slowly roll your eyes (3) Move your eyes diagonal.
- High energy blue light may lead to eye strain and AMD (Age-Related Macular Degeneration). Blue light filter to reduce 70% (max.) harmful blue light to avoiding CVS (Computer Vision Syndrome) when the user adjusts blue light filter bar to maximum level.

- **Rest Reminder:** This function provides you a rest reminder according to how long you set for your working time. For example, if you set a 30-minute working time and there will be a pop up reminder appeared on the upper left corner of the monitor for 5 seconds when time is up. Press any key to make this reminder OSD disappear.

When this function is enabled, the following functions are not available: Splendid Demo Mode, GamePlus, QuickFit.

- **Color Augmentation:** The adjusting range of color enhancement is from 0 to 100.

This function is not available when sRGB Mode is selected in the Splendid menu.

3. Color

Set the desired color settings from this menu.

- **Brightness:** The adjusting range is from 0 to 100.

This function is not available when Ambient Effect is enabled.

- **Contrast:** The adjusting range is from 0 to 100.
- **Saturation:** The adjusting range is from 0 to 100.
- **Color Temp.:** Contains 4 modes including **Cool**, **Normal**, **Warm** and **User Mode**.

4. Image

Set the image related settings from this menu.

- **Sharpness:** The adjusting range is from 0 to 100.
- **Trace Free:** Adjusts the response time of the monitor.
- **Aspect Control:** Adjusts the aspect ratio to **Full**, **Dot to Dot** or **1:1**.
- **ASCR:** Turns on/off the ASCR (ASUS Smart Contrast Ratio) function.
- **Motion Sync:** Offers a more clear mode while displaying motion pictures. Please note this function only works when the refresh rate is 75Hz~100Hz. It includes two modes: **Normal Mode** and **Advanced Mode**, which can provide different effects.

- When this function is enabled, the system will automatically reduce the brightness level.
- If the Adaptive-Sync is enabled, the Motion Sync function is grayed out.
- To activate this function, you need to do the following: turn off Ambient Effect.

- **Adaptive-Sync:** It can allow a Adaptive-Sync supported graphics source to dynamically adjust display refresh rate based on typical content frame rates for power efficient, virtually stutter free and low-latency display update.

This function is not available when Motion Sync is enabled.

- **HDR:** When the input source (PC or other devices) transmits an HDR signal, this setting will be enabled and you can choose **Gaming** (for a standard HDR curve) or **Cinema** (for an optimized HDR curve designed by ASUS) as the HDR setting.

5. PIP/PBP

In this function you can configure the Picture-in-Picture or Picture-by-Picture display modes.

- **Mode:** Allows you to enable Picture-in-Picture or Picture-by-Picture display modes. For Picture-in-Picture you can choose the location you want the smaller picture to be: **Right-Top**, **Left-Top**, **Right-**

Bottom, or **Left-Bottom**.

- **Source:** Allows you to select which video input source to display in each picture window.
- **PIP Size:** Allows you to set the size of the smaller picture of the Picture-in-Picture from **Small**, **Middle**, or **Large**.

6. Input

In this function, you can select your desired input source.

- **Auto Detection:** Automatically detects other active signals when current input signal is inactive.

7. Settings

Allows you to adjust the system.

- **Sound:**
  - * Adjusts **Volume** from 0 to 100.
  - * Mute or unmute the audio output.
  - * Select which picture window's audio to output when in PIP or PBP mode.
- **GamePlus:** The GamePlus function provides a toolkit and creates a better gaming environment for users when playing different types of games.
  - * **Crosshair:** The crosshair overlay with different crosshair

options lets you choose the one that best suits the game you're playing.

* **Timer:** You can position the timer on the upper left corner of the display so you can keep track of the gaming time.
* **FPS Counter:** The FPS (frames per second) counter lets you know how smooth the game is running.

- **QuickFit:** You can have a preview of the document or photo layout directly on screen without printing test copies.
  * **Paper size:** You can view the documents in real size on the screen.

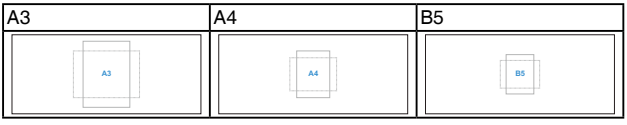

  * **Photo:** The various real photo sizes displayed provides photographers and other users to accurately view and edit their photos in real size on the screen.

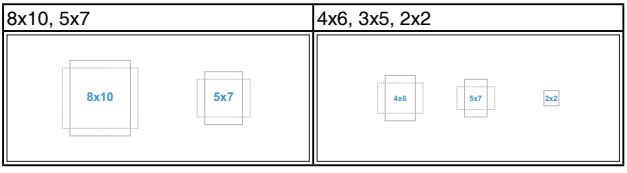

- **Dynamic Dimming:** When enabled, the backlight for the quadrant(s) of the screen where an image is displayed will light up. Only in dark or full brightness settings will every quadrant of the screen's backlight be lit up together.
- **Power Saving:** Reduces power consumption. The default setting is "Deep Level". When "Deep Level" is selected, the maximum brightness value is fixed and Splendid mode is fixed at "Standard Mode".
- **DisplayPort Stream:** Select a DisplayPort version based on the device in use. If **DP 1.2** or **DP 1.4** is selected, the USB-A port can only support USB 2.0 devices. If **DP 1.4+USB 3.2** is selected, the USB-A port can support USB 3.2 devices.
- **OSD Setup:**
  * Adjusts the OSD timeout from 10 to 120 seconds.
  * Enables or disables the DDC/CI function.
  * Adjusts the OSD background from opaque to transparent.
- **HDMI CEC:** Enables/Disables Consumer Electronics Control (CEC) which when enabled allows you to control the monitor via the remote control of the device connected to the HDMI port.
- **Language:** There are 23 languages for your selection, including

English, French, German, Spanish, Italian, Dutch, Russian, Polish, Czech, Croatian, Hungarian, Romanian, Portuguese, Turkish, Simplified Chinese, Traditional Chinese, Japanese, Korean, Persian, Thai, Indonesian, Ukrainian, Vietnamese.

- **Key Lock:** To disable all function keys. Push the 5-way button down for over 5 seconds to cancel the key lock function.
- **Information:** Shows the monitor information.
- **Power Indicator:** Turns the power LED indicator on/off.
- **Ambient Effect:** Synchronizes display brightness with ambient light changes.
- **USB-C Charging:** Sets the wattage of the Power Delivery (charging) function for the USB-C port.

- When this setting is set to 96W, the four USB-A ports will have no function and the monitor will display images with half of the original brightness and no sound. HDR and Dynamic Dimming will automatically be disabled.
- When this setting is set to 96W and another Splendid mode is selected this setting will automatically switch back to 65W.

- **Nano-ion:** Enables/Disables the nano-ion air purifier located at the rear side of the monitor.

  * **If Nano-ion is set to ON_ECO or ON:** The Nano-ion function will be enabled. The behavior of the power indicator for the Nano-ion function will follow the table below:

Description	With Signal	Without Signal
ON_ECO	Nano-ion: ON Power Indicator: White Flashing	Nano-ion: OFF Power Indicator: Amber
On	Nano-ion: ON Power Indicator: White Flashing	Nano-ion: ON Power Indicator: Amber Flashing

- **All Reset:** “Yes” allows you to restore the default settings.

8. Shortcut

Defines the functions for Shortcut 1 and 2 buttons.

- **Shortcut 1/Shortcut 2:** Selects a function for Shortcut 1 and 2 buttons.

3.2 Specifications summary

Panel Type	TFT LCD
Panel size	Panel Size: 34” (21:9)
Max. Resolution	3440 x 1440
Pixel pitch	0.23175 x 0.23175 mm
Brightness (Typ.)	300 nits (Typ.)
Contrast Ratio (Typ.)	3500:1
Viewing angle (H/V) CR>10	178˚/178˚
Display colors	16.7 M
Response time	4 ms (GTG)
Color temperature selection	4 color temperatures
Digital input	DisplayPort v1.4 x 1, HDMI 2.0 x 1, DisplayPort over USB type C
Digital Output	No
Earphone jack	Yes
Audio input	No
Speaker (Built-in)	2W x 2
USB	USB 3.2 Gen 1 Type-C x 1, USB 3.2 Gen1 Type-A x 4
Power LED	White (ON) / White Breathing Light (Nano-ion ON) / Amber (Standby)
Tilt	-3˚ – +21˚
Height adjustment	50mm
VESA wall mount	100 x 100 mm
Kensington lock	Yes
AC input voltage	AC: 100 – 240V
Power consumption	Power On: 28.2 W**, Standby: ≤ 0.5 W, Power Off: 0W
Power rating	DC / 140W max
Temperature (Operating)	0˚C – 40˚C
Temperature (Non-operating)	-20˚C – +60˚C
Dimension (W x H x D) without stand	807.25 mm x 364.8 mm x 108.8 mm
Dimension (W x H x D) with stand	807.25 mm x 485.9 mm x 205.88 mm (highest) 807.25 mm x 460.9 mm x 205.88 mm (middle) 807.25 mm x 435.9 mm x 205.88 mm (lowest) 931 mm x 475 mm x 186 mm (package)
Weight (Esti.)	5.215 kg (Net); 4.6 kg (Net, without stand); 9.9 kg (Gross)
Multi-languages	23 languages (English, French, German, Italian, Spanish, Dutch, Portuguese, Russian, Czech, Croatian, Polish, Romanian, Hungarian, Turkish, Simplified Chinese, Traditional Chinese, Japanese, Korean, Thai, Indonesian, Vietnamese, Persian, Ukrainian)
Accessories	Quick start guide, warranty card, power cord, 4 M4x10 screws, 1 M5x10 screw, HDMI cable (optional), DisplayPort cable (optional), USB-C to USB-C cable (optional), L-shaped screwdriver (optional)

Compliance and Standards	cTUVus, CB, CE, ErP, EU Energy label, FCC, ICES-3, CCC, CEL, ISO9241-307, BSMI, EAC, RCM, MEPS, VCCI, PSE, J-MOSS, KC, KMEPS, RoHS, UkrSEPRO, PC Recycle, Windows 10&11 WHQL, Energy Star 8.0, EPEAT Gold, TCO 9.0, Flicker Free, Low Blue Light, WEEE

***Specifications are subject to change without notice.**
****Power consumption of On Mode as defined in Energy Star 8.0 version.**
***** Standard Mode with Local Dimming disabled is used for TCO/Low Blue light/Flicker free/ISO 9241-307 Certified compliance.**

3.3 Outline dimensions

*Unit: mm(inch)

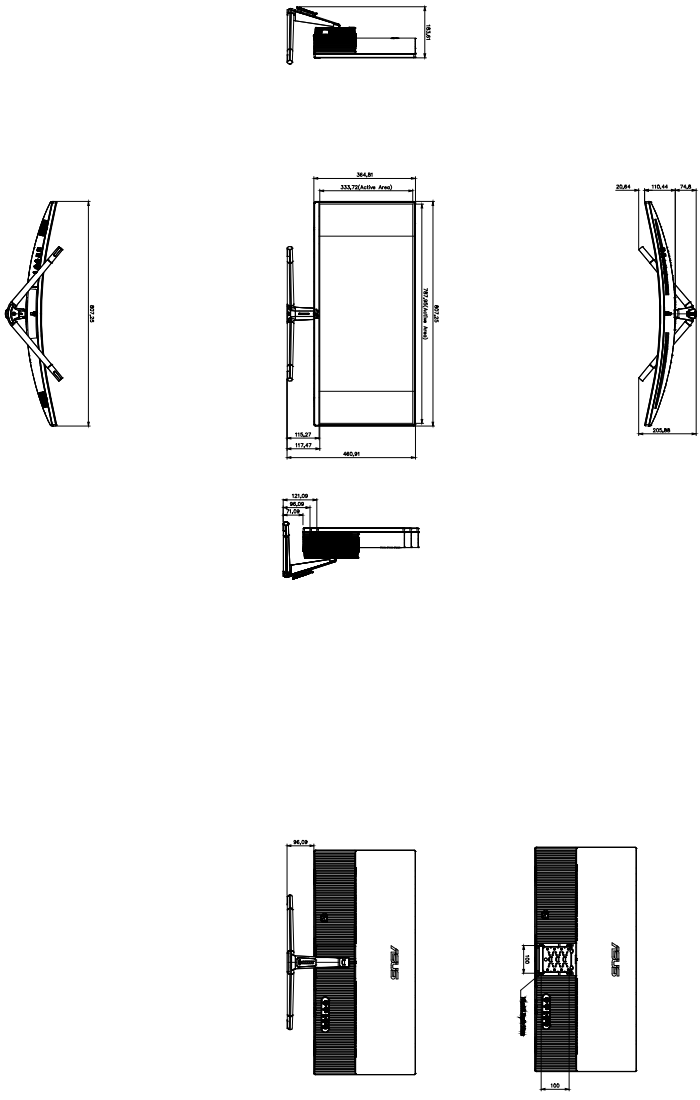

3.4 Troubleshooting (FAQ)

Problem	Possible Solution
Power LED is not ON	• Press the button to check if the monitor is in the ON mode. • Check if the power cord is properly connected to the monitor and the power outlet. • Check if the power switch is ON.
The power LED lights amber and there is no screen image	• Check if the monitor and the computer are in the ON mode. • Make sure the signal cable is properly connected the monitor and the computer. • Inspect the signal cable and make sure none of the pins are bent. • Connect the computer with another available monitor to check if the computer is properly working.
Screen image is too light or dark	• Adjust the Contrast and Brightness settings via OSD.
Screen image bounces or a wave pattern is present in the image	• Make sure the signal cable is properly connected to the monitor and the computer. • Move electrical devices that may cause electrical interference.
Screen image has color defects (white does not look white)	• Inspect the signal cable and make sure that none of the pins are bent. • Perform All Reset via OSD. • Adjust the R/G/B color settings or select the Color Temperature via OSD.
No sound or sound is low	• Ensure that the HDMI/DP/USB-C cable is properly connected to the monitor and the computer. • Adjust the volume settings of both your monitor and HDMI/DP/USB-C device. • Ensure that the computer sound card driver is properly installed and activated.

3.5 Supported operating modes

Input Timing Resolution	Horizontal Frequency (KHz)	Vertical Frequency (Hz)	Dot Clock Frequency (MHz)
640x480	31.47(N)	59.94(N)	25.18
640x480	37.5(N)	75.00(N)	31.5
800x600	37.88(P)	60.32(P)	40
800x600	46.86(P)	75.00(P)	49.5
1024x768	48.36(N)	60.00(N)	65
1024x768	60.02(N)	75.00(N)	78.75
1280x960	60.00(P)	60.00(N)	108
1280x1024	63.98(P)	60.02(P)	108
1280x720	44.77(N)	60	74.5
1600x1200	75.00(P)	60.00(P)	162
1920x1080	67.5(P)	60.00(P)	148.5
2560x1440	88.787(P)	59.951(N)	241.5
2560x1440	150.919(P)	99.946(N)	410.5
3440x1440	88.819(P)	59.973(N)	319.75
3440x1440	150.972(P)	99.982(N)	543.5

"P" / "N" stands for "Positive" / "Negative" polarity of incoming H-sync/ V-sync (input timing).

When the monitor is operating in the video mode (ie, not displaying data), the following high definition modes shall be supported in addition to standard definition video.

Video Timing Resolution	Vertical Frequency (Hz)
640 × 480p	59.94Hz
	60Hz
720 × 480p	59.94Hz
	60Hz
720 × 576p	50Hz
1280 × 720p	50Hz
	59.94Hz
	60Hz
1920 × 1080p	24Hz
	25Hz
	30Hz
	50Hz
	60Hz
	100Hz
3840 x 2160p	24Hz
	25Hz
	30Hz
	50Hz
	60Hz