LCD Monitor

User Manual

Stylish Monitor with Eye Care Technology | G Series

Copyright

Copyright © 2024 by BenQ Corporation. All rights reserved. No part of this publication may be reproduced, transmitted, transcribed, stored in a retrieval system or translated into any language or computer language, in any form or by any means, electronic, mechanical, magnetic, optical, chemical, manual or otherwise, without the prior written permission of BenQ Corporation.

Disclaimer

BenQ Corporation makes no representations or warranties, either expressed or implied, with respect to the contents hereof and specifically disclaims any warranties, merchantability or fitness for any particular purpose. Further, BenQ Corporation reserves the right to revise this publication and to make changes from time to time in the contents hereof without obligation of BenQ Corporation to notify any person of such revision or changes.

BenQ flicker-free technology maintains a stable backlight with a DC dimmer that eliminates the primary cause of monitor flicker, making it easier on the eyes. The performance of flicker-free may be affected by external factors such as poor cable quality, unstable power supply, signal interference, or poor grounding, and not limited to the above mentioned external factors. (Applicable for flicker-free models only.)

BenQ ecoFACTS

BenQ has been dedicated to the design and development of greener product as part of its aspiration to realize the ideal of the "Bringing Enjoyment 'N Quality to Life" corporate vision with the ultimate goal to achieve a low-carbon society. Besides meeting international regulatory requirement and standards pertaining to environmental management, BenQ has spared no efforts in pushing our initiatives further to incorporate life cycle design in the aspects of material selection, manufacturing, packaging, transportation, using and disposal of the products. BenQ ecoFACTS label lists key eco-friendly design highlights of each product, hoping to ensure that consumers make informed green choices at purchase. Check out BenQ's CSR Website at http://csr.BenQ.com/ for more details on BenQ's environmental commitments and achievements.

Product support

This document aims to provide the most updated and accurate information to customers, and thus all contents may be modified from time to time without prior notice. Please visit the website for the latest version of this document and other product information. Available files vary by model.

1. Make sure your computer is connected to the Internet.
2. Visit the local website from Support.BenQ.com. The website layout and content may vary by region/country.
   - User manual and related document
   - Drivers and applications
   - (EU only) Dismantled information: Available on the user manual download page. This document is provided based on Regulation (EU) 2019/2021 to repair or recycle your product. Always contact the local customer service for servicing within the warranty period. If you wish to repair an out-of-warranty product, you are recommended to go to a qualified service personnel and obtain repair parts from BenQ to ensure compatibility. Do not disassemble the product unless you are aware of the consequences. If you cannot find the dismantled information on your product, contact the local customer service for assistance.

Firmware upgrade

You are recommended to upgrade the product to the latest firmware version (if available) and refer to the most up-to-date user manual to make best use of the product.

To upgrade your monitor, download and install the **Display QuicKit** software from the BenQ website.

- Support.BenQ.com > model name > **Software & Driver** > **Display QuicKit** (available only when your monitor is compatible)
- Support.BenQ.com > **Display QuicKit** (availability may vary by region)

The software utility checks the compatibility of your monitor automatically once launched.

Refer to the user manual of the software utility for instructions.

If your monitor is not compatible with **Display QuicKit**, and you wonder if there is an updated firmware version available, please contact BenQ customer service.

EPREL Registration Number:

GW2490: 1823157	GW2790: 1823163	GW2790QT: 1384814
GW2490E: 1823158	GW2790E: 1823164	GW3290QT: 1392381
GW2490T: 1823159	GW2790T: 1823165	

Q&A index

Start with the topics that you are interested in.

Setup

How to set up the monitor and turn it on?

Safety precautions 6

How to assemble your monitor hardware (for models with height adjustment stand) 20

How to adjust the monitor viewing angle?

Viewing angle adjustment 28

How to wall mount the monitor?

Using the monitor wall mounting kit (purchased separately) 29

Useful tools to enhance efficiency

How to improve vocal sounds during conference calls?

Working with the built-in Noise Cancellation Microphone (selected models only) 43

Working with the Noise Filter Speakers (selected models only) 43

How to connect two ore more monitors to have more screen space?

Connecting multiple monitors via MST (Multi-Stream Transport)(selected models only) 45

Functions to reduce eye strain

How to reduce the blue light emitted from the display?

Working with Low Blue Light Plus 41

How to set the appropriate screen brightness?

Adjusting screen brightness automatically (Brightness Intelligence Gen2) 42

Menus and accessories

How to use the OSD menu?

5-way controller and basic menu operations 38

Navigating the main menu 47

Maintenance and product support

How to clean the monitor?

Care and cleaning 9

How to keep the monitor not in use for a long time?

How to detach the stand and the base 25

Care and cleaning 9

I need more support.

Product support 3
Servicing 9

Safety precautions

Power safety

Please follow these safety instructions for best performance, and long life for your monitor.

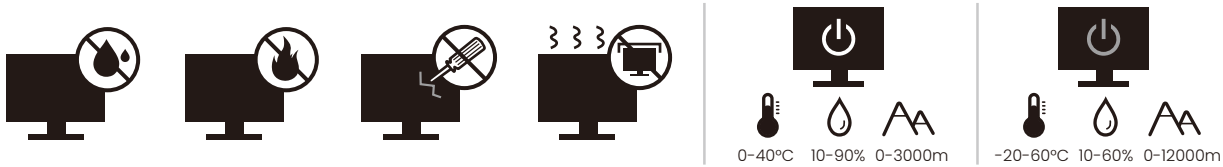

- The AC plug isolates this equipment from the AC supply.
- The power supply cord serves as a power disconnect device for pluggable equipment. The socket outlet should be installed near the equipment and be easily accessible.
- This product should be operated from the type of power indicated on the marked label. If you are not sure of the type of power available, consult your dealer or local power company.
- The Class I pluggable equipment Type A must be connected to protective earth.
- An approved power cord greater or equal to H03VV-F or H05VV-F, 2G or 3G, 0.75mm^2 must be used.
- Use only the power cord provided by BenQ. Never use a power cord that appears to be damaged or frayed.
- To avoid possible damage to the monitor, do not use it in a region where power supply is unstable.
- Ensure that the power cord is connected to a grounded power outlet before turning on the monitor.
- To avoid possible danger, observe the total electric load when using the monitor with a (multi-outlet) extension cord.
- Always turn off the monitor before unplugging the power cord.

For Germany only:

- (If the weight of the product is less than or equal to 3 kg) An approved power cord greater or equal to H03VV-F, 3G, 0.75mm^2 must be used.
- (If the weight of the product is more than 3 kg) An approved power cord greater or equal to H05VV-F or H05RR-F, 3G, 0.75mm^2 must be used.
- (If a remote control is provided) RISK OF EXPLOSION IF BATTERY IS REPLACED BY AN INCORRECT TYPE. DISPOSE OF USED BATTERIES ACCORDING TO THE INSTRUCTIONS.

For models with adapter:

- Use only the power adapter supplied with your LCD Monitor. Use of another type of power adapter will result in malfunction and/or danger.
- Allow adequate ventilation around the adapter when using it to operate the device or charge the battery. Do not cover the power adapter with paper or other objects that will reduce cooling. Do not use the power adapter while it is inside a carrying case.
- Connect the power adapter to a proper power source.
- Do not attempt to service the power adapter. There are no service parts inside. Replace the unit if it is damaged or exposed to excess moisture.

Installation

- Do not use your monitor under any of the following environmental conditions:
  - Extremely high or low temperature, or in direct sunlight
  - Dusty places
  - Highly humid, exposed to rain, or close to water
  - Exposed to vibrations or impacts in places such as cars, buses, trains, and other rail vehicles
  - Near heating appliances such as radiators, heaters, fuel stoves, and other heat-generating items (including audio amplifiers)
  - An enclosed place (such as a closet or bookcase) without appropriate ventilation
  - An uneven or sloping surface
  - Exposed to chemical substances or smoke
- Carry the monitor carefully.
- Do not place heavy loads on the monitor to avoid possible personal injury or damage to the monitor.
- Ensure that children do not hang or climb onto the monitor.
- Keep all packing bags out of reach of children.

Operation

- To protect your eyesight, please refer to the user manual to set the optimal screen resolution and the viewing distance.
- To reduce eye fatigue, take a break on a regular basis while using the monitor.
- Avoid taking either one of the following actions for a long time. Otherwise, burn marks may occur.
  - Play images that cannot occupy the screen entirely.
  - Place a still image on the screen.
- To avoid possible damage to the monitor, do not touch the monitor panel by finger tip, pen, or any other sharp objects.
- Excessively frequent plug and unplug of video connectors may cause damage to the monitor.
- This monitor is designed mainly for personal use. If you want to use the monitor in a public place or a harsh environment, contact your nearest BenQ service center for assistance.
- To avoid possible electric shock, do not dissemble or repair the monitor.
- If a bad smell or an abnormal sound appears to come from the monitor, contact your nearest BenQ service center for assistance immediately.

Caution

- The distance between you and the monitor should be 2.5 to 3 times the diagonal width of the screen.
- Looking at the screen for an extended period of time causes eye fatigue and may deteriorate your eyesight. Rest your eyes for 5 ~ 10 minutes for every 1 hour of product use.
- Reduce your eye strain by focusing on objects far way.
- Frequent blinking and eye exercise help keep your eyes from drying out.

Safety notice for remote control (applicable if a remote control is provided)

- Do not put the remote control in the direct heat, humidity, and avoid fire.
- Do not drop the remote control.
- Do not expose the remote control to water or moisture. Failure to do so could result in malfunction.
- Confirm there is no object between the remote control and the remote sensor of the product.
- When the remote control will not be used for an extended period, remove the batteries.

Battery safety notice (applicable if a remote control is provided)

The use of the wrong type of batteries may cause chemical leaks or explosion. Please note the following:

- Always ensure that the batteries are inserted with the positive and negative terminals in the correct direction as shown in the battery compartment.
- Different types of batteries have different characteristics. Do not mix different types.
- Do not mix old and new batteries. Mixing old and new batteries will shorten battery life or cause chemical leaks from the old batteries.
- When batteries fail to function, replace them immediately.
- Chemicals which leak from batteries may cause skin irritation. If any chemical matter seeps out of the batteries, wipe it up immediately using a dry cloth, and replace the batteries as soon as possible.
- Due to varying storage conditions, the battery life for the batteries included with your product may be shortened. Replace them within 3 months or as soon as you can after initial use.
- There may be local restrictions on the disposal or recycling of batteries. Consult your local regulations or waste disposal provider.

If the supplied remote control contains a coin / button cell battery, pay attention to the following notice as well.

- Do not ingest battery. Chemical Burn Hazard.
- The remote control supplied with this product contains a coin / button cell battery. If the coin / button cell battery is swallowed, it can cause severe internal burns in just 2 hours and can lead to death.
- Keep new and used batteries away from children. If the battery compartment does not close securely, stop using the product and keep it away from children.
- If you think batteries might have been swallowed or placed inside any part of the body, seek immediate medical attention.

Care and cleaning

- Do not place the monitor face down on the floor or a desk surface directly. Otherwise, scratches on the panel surface may occur.
- The equipment is to be secured to the building structure before operation.
- (For models that support wall or ceiling mounting)
  - Install your monitor and monitor mounting kit on a wall with flat surface.
  - Ensure that the wall material and the standard wall mount bracket (purchased separately) are stable enough to support the weight of the monitor.
  - Turn off the monitor and the power before disconnecting the cables from the LCD monitor.
- Always unplug the product from the power outlet before cleaning. Clean the LCD monitor surface with a lint-free, non-abrasive cloth. Avoid using any liquid, aerosol or glass cleaners.
- Slots and openings on the back or top of the cabinet are for ventilation. They must not be blocked or covered. Your monitor should never be placed near or over a radiator or heat sources, or in a built-in installation unless proper ventilation is provided.
- Do not place heavy loads on the monitor to avoid possible personal injury or damage to the monitor.
- Consider keeping the box and packaging in storage for use in the future when you may need to transport the monitor.
- Refer to the product label for information on power rating, manufacture date, and identification markings.

Servicing

- Do not attempt to service this product yourself, as opening or removing covers may expose you to dangerous voltages or other risks. If any of the above mentioned misuse or other accident such as dropping or mishandling occurs, contact qualified service personnel for servicing.
- For replacement of power cord, connection cables, remote control or power adapter, please contact BenQ customer service.
- Contact your place of purchase or visit the local website from Support.BenQ.com for more support.

Support.BenQ.com

General warranty information

Note that the monitor warranty may be void if any of the following conditions occurs:

- Documents required for warranty services have been altered by unauthorized use or is illegible.
- The model number or production number on the product has been altered, deleted, removed or made illegible.
- Repairs, modifications, or alterations have been made by unauthorized service organizations or persons.
- Damage caused by improper storage of the monitor (including but not limited to force majeure, direct exposure to sunlight, water, or fire).
- Reception problems occurred due to external signals (such as antenna, Cable TV) outside the monitor.

- Defects caused by abuse or misuse of the monitor.
- Before using the monitor, it is the sole responsibility of the user to check whether the monitor is compatible with local technical standards if the user brings the monitor out of its intended sales area. Failure to do so may cause product breakdown and the user will have the pay the repairing costs.
- It is the sole responsibility of the user if problems (such as data loss and system failure) occurred due to non-factory provided software, parts, and/or non-original accessories.
- Please use the original accessories (e.g. power cable) only with the device to avoid possible dangers such as electric shock and fire.

Typographics

Icon / Symbol	Item	Meaning
	Warning	Information mainly to prevent the damage to components, data, or personal injury caused by misuse and improper operation or behavior.
	Tip	Useful information for completing a task.
	Note	Supplementary information.

In this document, the steps needed to reach a menu may be shown in condensed form, for example: **Menu** > **System** > **Information**.

Table of Contents

Copyright 2

Product support 3

- Firmware upgrade 3

Q&A index 4

Safety precautions 6

- Power safety 6
- Installation 7
- Operation 7
- Safety notice for remote control (applicable if a remote control is provided) 8
- Battery safety notice (applicable if a remote control is provided) 8
- Care and cleaning 9
- Servicing 9
- General warranty information 9

Getting started 13

Getting to know your monitor 15

- Front view 15
- Back view 16
- Connections 17
- Power delivery of USB-C™ ports on your monitor (GW2790QT/GW3290QT only) 19

How to assemble your monitor hardware (for models with height adjustment stand) 20

- How to detach the stand and the base 25
- Adjusting the monitor height 26
- Rotating the monitor 27
- Viewing angle adjustment 28
- Using the monitor wall mounting kit (purchased separately) 29

How to assemble your monitor hardware (for models without height adjustment stand) 30

- How to detach the stand and the base 34
- Using the monitor wall mounting kit (purchased separately) 35

How to adjust your monitor 36

- The control panel 36
- 5-way controller and basic menu operations 38
- Switching the inputs quickly (selected models only) 39
- Working with the **Quick Menu** 40
- Adjusting display mode 40
- Choosing an appropriate picture mode (color mode) 41
- Working with **Low Blue Light Plus** 41
- Available menu options to each **Color Mode** 41

Adjusting screen brightness automatically (Brightness Intelligence Gen2) 42
Enabling color vision accessibility (**Color Weakness**) 42
Working with the built-in Noise Cancellation Microphone (selected models only) 43
Working with the Noise Filter Speakers (selected models only)..... 43
Charging the connected device via USB-C™ port (selected models only) 44
Connecting multiple monitors via MST (Multi-Stream Transport)(selected models only) . 45
Working with a Mac series product..... 46

Navigating the main menu 47

Input menu 48
Color Mode menu 49
Eye Care menu 51
Color menu 53
Audio menu 55
System menu 57

Troubleshooting 61

Frequently asked questions (FAQ)..... 61
Need more help?..... 64

2024/02/19
G90-EM-V4

Getting started

When unpacking please check you have the following items. If any are missing or damaged, please contact the place of purchase for a replacement.

BenQ LCD Monitor	GW2790QT/GW3290QT 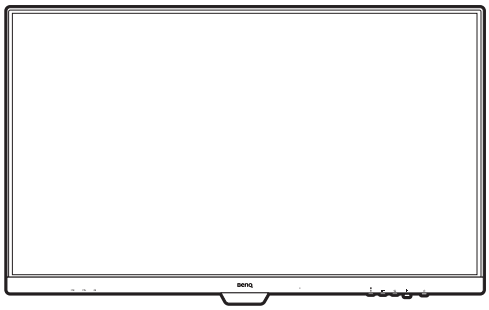 GW2490/GW2490T/GW2790/GW2790T 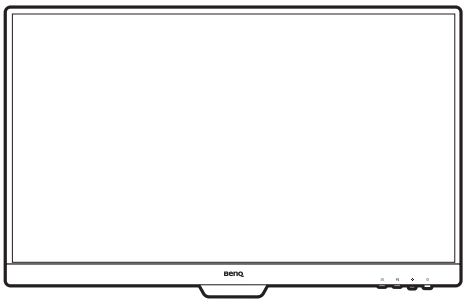
Monitor Stand (For models with height adjustment stand)	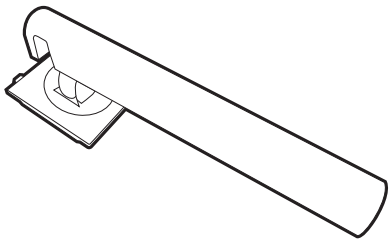
Monitor Base (For models with height adjustment stand)	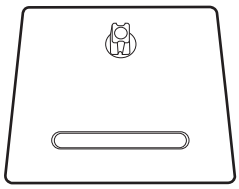
Monitor Stand (For models without height adjustment stand)	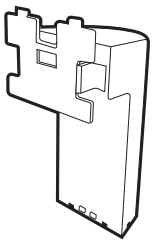
Monitor Base (For models without height adjustment stand)	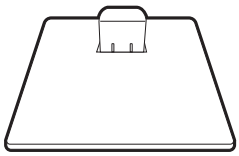

Quick Start Guide	
Safety Instructions	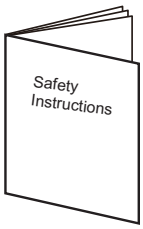
Regulatory Statements	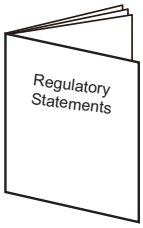
Power Cord (Supplied item may differ by model or region.)	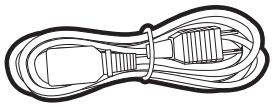
Video Cable: HDMI	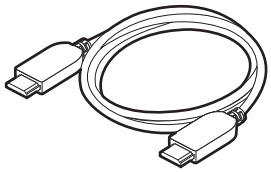
Video Cable: USB-C™ (Optional accessory)	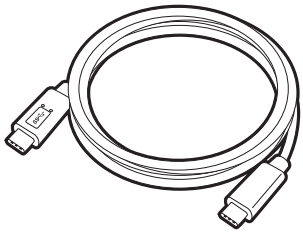
Monitor base cover GC01 (Optional accessory, for models with height adjustment stand) Visit www.BenQ.com for the availability of base cover GC01.	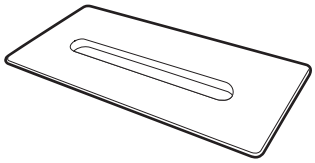

- Available accessories and the pictures shown here may differ from the actual contents and the product supplied for your region. And the package contents may subject to change without prior notice. For cables that are not supplied with your product, you can purchase them separately.
- Consider keeping the box and packaging in storage for use in the future when you may need to transport the monitor. The fitted foam packing is ideal for protecting the monitor during transport.
- Accessories and cables may be included or sold separately depending on the product supplied for your region.

Always keep the product and accessories out of reach of small children.

Getting to know your monitor

Front view

GW2790QT/GW3290QT

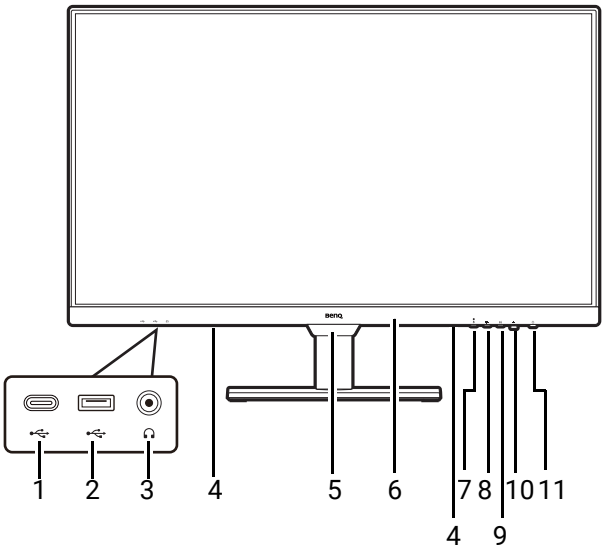

GW2490/GW2490T/GW2790/GW2790T

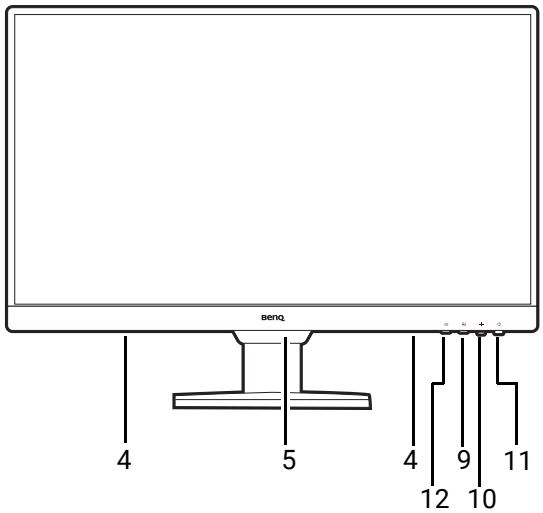

1. USB-C™ port (for data transfer and power delivery up to 7.5W)
2. USB 3.2 Gen 1 ports (downstream; connecting to the USB devices)
3. Headphone jack
4. Speakers
5. Light sensor
6. Built-in microphone and MIC LED indicator (See page 43 for details.)
7. MIC key
8. Noise Filter Speaker key
9. Low Blue Light Plus key
10. 5-way controller
11. Power button / Power LED indicator
12. Input key

Back view

GW2790QT/GW3290QT

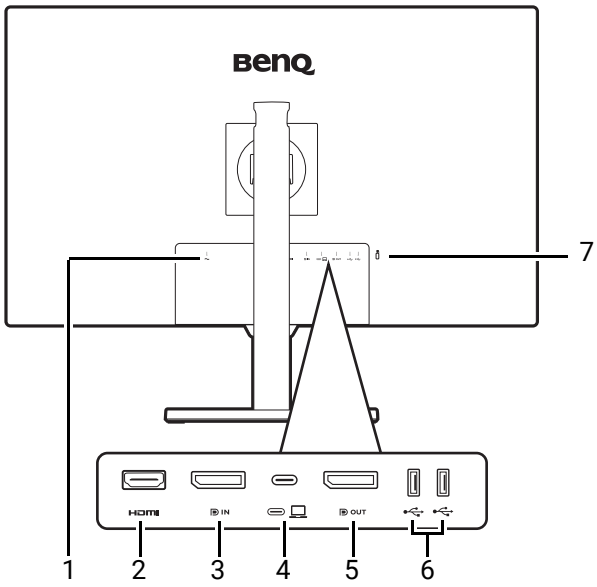

GW2490/GW2490T/GW2790/GW2790T

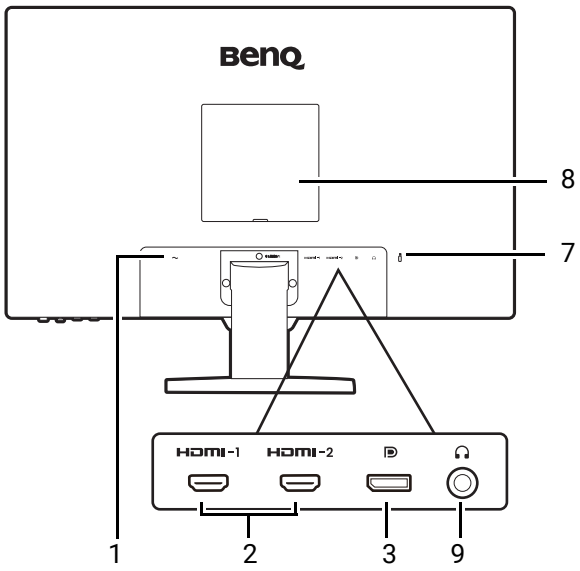

1. AC power input jack
2. HDMI socket
3. DisplayPort socket
4. USB-C™ port (for signal transmission and power delivery up to 65W)
5. DisplayPort output socket (for Multi-Stream Transport, MST)
6. USB 3.2 Gen 1 ports (downstream; connecting to the USB devices)
7. Kensington lock slot
8. VESA cover
9. Headphone jack

- Above diagram may vary depending on the model.
- Picture may differ from product supplied for your region.
- (Applicable for products with white case) The case of the product may turn yellow in about 3 years due to the photo-oxidation reactions induced by light. This is a normal phenomenon and should not be considered as manufacturing defect.

Connections

The following connection illustrations are for your reference only. For cables that are not supplied with your product, you can purchase them separately.

For detailed connection methods, see page 22 (for models with height adjustment stand) or 32 (for models without height adjustment stand).

GW2790QT/GW3290QT

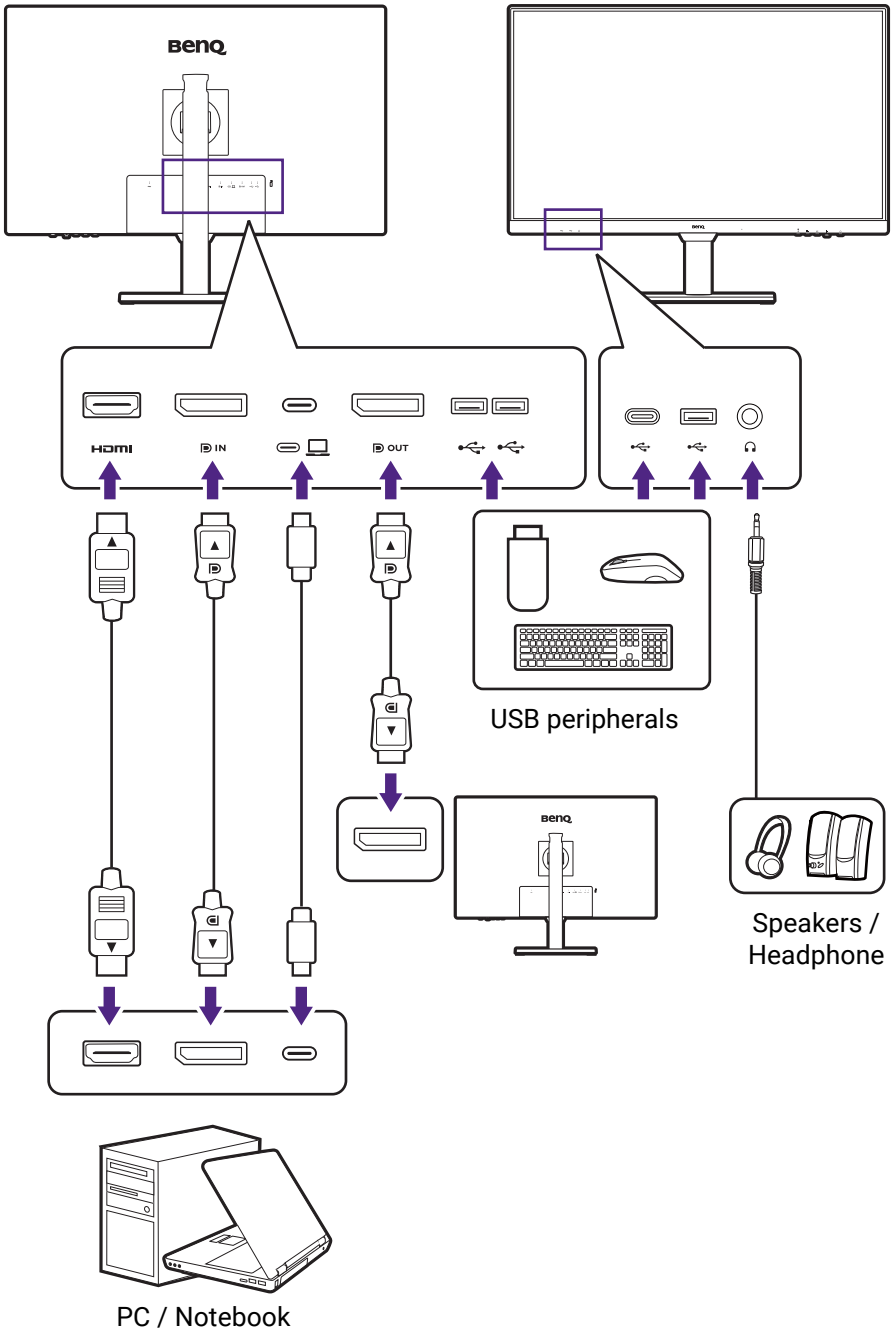

GW2490/GW2490T/GW2790/GW2790T

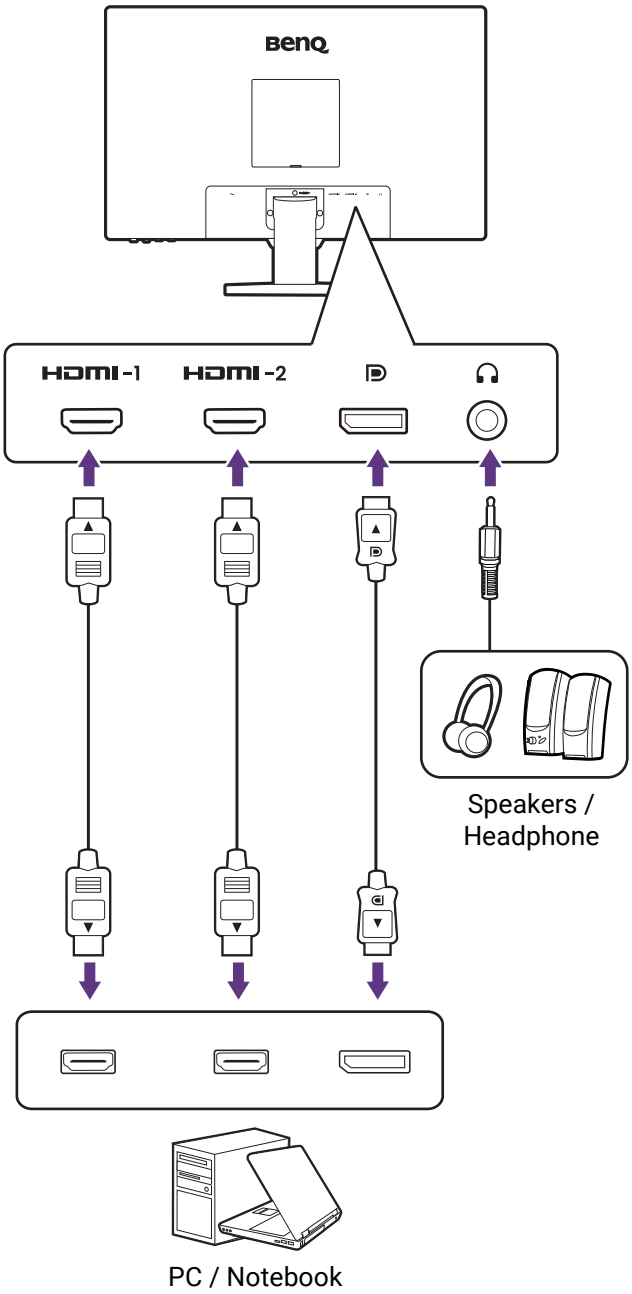

Power delivery of USB-C™ ports on your monitor (GW2790QT/GW3290QT only)

With the power delivery function, your monitor helps supply power to the connected USB-C™ devices. Available power varies by port. Make sure the devices are connected to the appropriate ports to be activated properly with sufficient power.

GW2790QT/GW3290QT
USB-C™ Power Delivery (on the rear of the monitor)
5V / 3A
9V / 3A
12V / 3A
15V / 3A
20V / 3.25A

- A connected device needs to be equipped with a USB-C™ connector that supports charging function via USB power delivery.
- The connected device can be charged via USB-C™ port even when the monitor is in power saving mode.(*)
- The USB power delivery is up to 65W. If the connected device requires more than 65W for operation or for boot up (when the battery is drained), use the original power adapter that came with the device.
- The information is based on the standard testing criteria and is provided for reference. The compatibility is not guaranteed as the user environments vary. If a separately purchased USB-C™ cable is used, make sure the cable is certified by USB-IF and is full-featured, with power delivery and video / audio / data transfer functions.

*: Charging via USB-C™ in monitor power saving mode is available when the USB-C power delivery function is enabled. Go to **System** > **USB-C Awake** and select **ON**.

How to assemble your monitor hardware (for models with height adjustment stand)

- If the computer is turned on you must turn it off before continuing.
- Do not plug-in or turn-on the power to the monitor until instructed to do so.
- The illustrations in this document are for your reference only and may look different from the appearance of the product. Check Back view and The control panel for the available ports and controls of the purchased model.
- Avoid finger pressure on the screen surface.
- The latch on the monitor stand/base of the same model may vary by design, yet the installation, function, and product appearance are not affected in general. Be sure to assemble the monitor with the stand/base in the same package.

Never stand your monitor on a desk or floor without its stand arm and base. The controls on the bottom of the front bezel are not designed to hold the weight of the monitor and may be damaged.

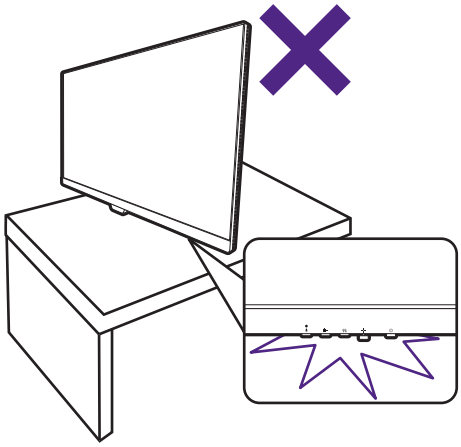

1. Attach the monitor stand and base.

Please be careful to prevent damage to the monitor. Placing the screen surface on an object like a stapler or a mouse will crack the glass or damage the LCD substrate voiding your warranty. Sliding or scraping the monitor around on your desk will scratch or damage the monitor surround and controls.

Protect the monitor and screen by clearing a flat open area on your desk and placing a soft item like the monitor packaging bag on the desk for padding.

Gently lay the screen face down on a flat clean padded surface.

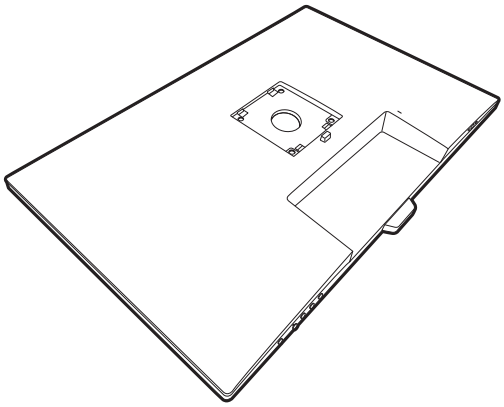

Attach the monitor stand to the monitor base as illustrated.

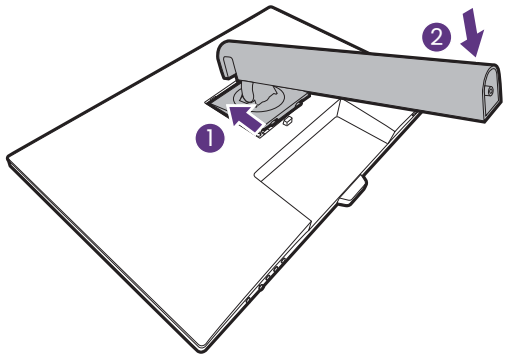

Orient and align the stand arm with the monitor (❶), push them together until they click and lock into place (❷).

Tighten the thumbscrew on the bottom of the monitor base as illustrated.

Gently attempt to pull them back apart to check that they have properly engaged.

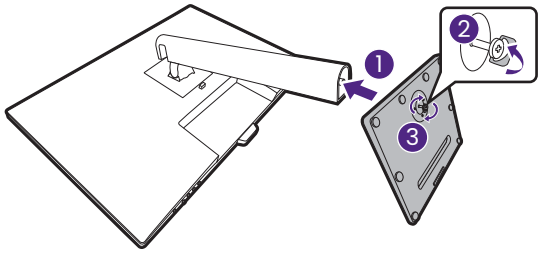

Carefully lift the monitor, turn it over and place it upright on its stand on a flat even surface.

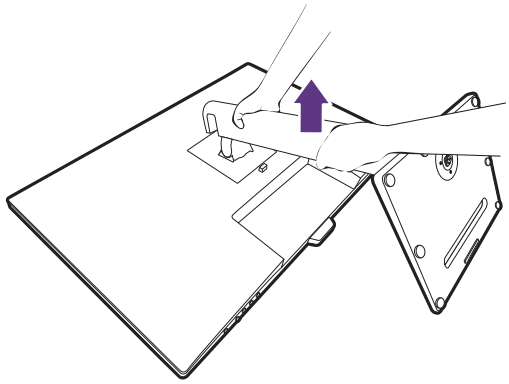

You might want to adjust the monitor stand height. See Adjusting the monitor height on page 26 for more information.

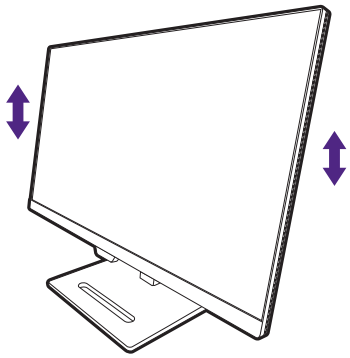

Your monitor is an edge-to-edge monitor and should be handled with care. Avoid finger pressure on the screen surface. Adjust the screen angle by placing your hands on the top and on the bottom of the monitor as illustrated.

You should position the monitor and angle the screen to minimize unwanted reflections from other light sources.

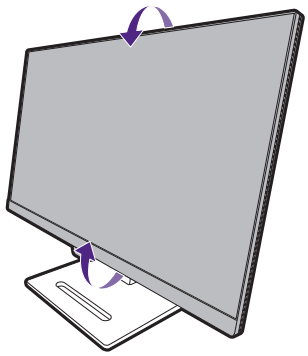

2. Connect the PC video cable

The video cables included in your package and the socket illustrations on the right may vary depending on the product supplied for your region.

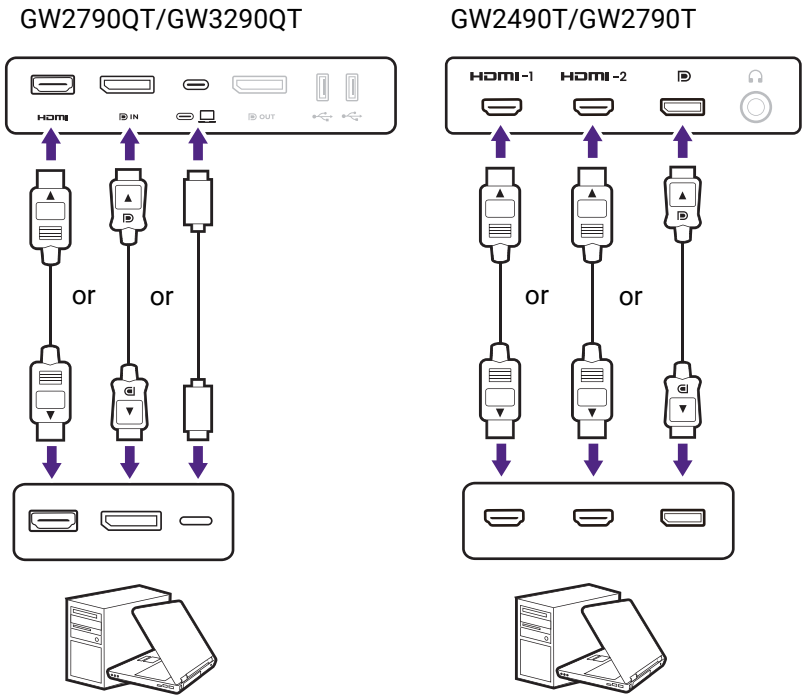

- Connect the plug of the HDMI cable to the HDMI port on the monitor. Connect the other end of the cable to the HDMI port of a digital output device.
- Connect the plug of the DP cable to the monitor video socket. Connect the other end of the cable to the computer video socket.
- Connect the plug of the supplied USB-C™ cable to the USB-C™ port on the rear of the monitor. Connect the other end of the cable to the USB-C™ port of a laptop. It allows signal, audio, and data transmission from the laptop to the monitor.

Tighten all finger screws to prevent the plugs from accidently falling out during use.

3. Connect the headphone.

You may connect headphones to the headphone jack on your monitor. The location of the headphone jack varies by model.

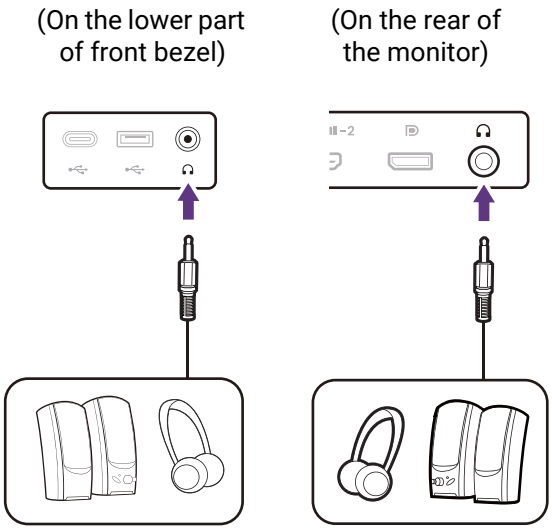

4. Connect the USB devices.

Available for models with USB-C™ and USB-A ports. Check Back view for the available ports of the purchased model.

1. Connect the USB-C™ cable between the PC and the monitor (via the USB-C™ port). This upstream USB port transmits data between the PC and the USB devices connected to the monitor.
2. Connect USB devices via other USB ports (downstream) on the lower part of the front bezel. These downstream USB ports transmit data between the connected USB devices and the upstream port.

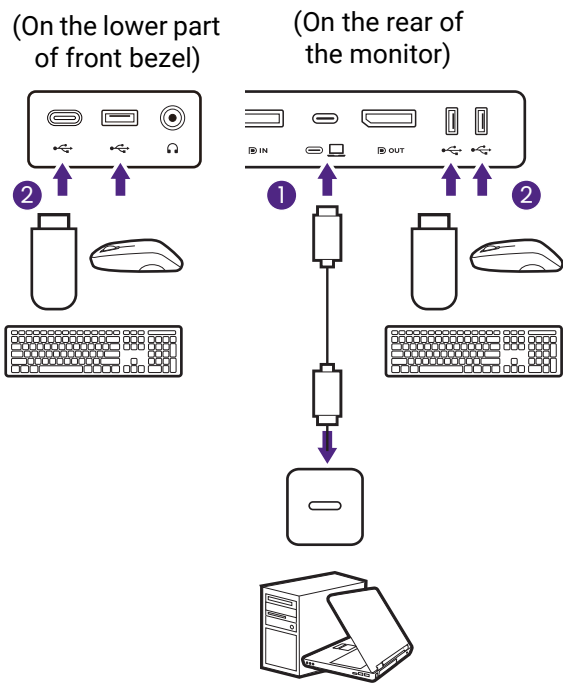

5. Attach monitor base cover to the base.(optional step)

Use the base cover (optional accessory) to hold devices to keep your working space neat with style.

Visit www.BenQ.com for the availability of base cover GC01.

The device on the base cover is for illustration only and is not provided with the product.

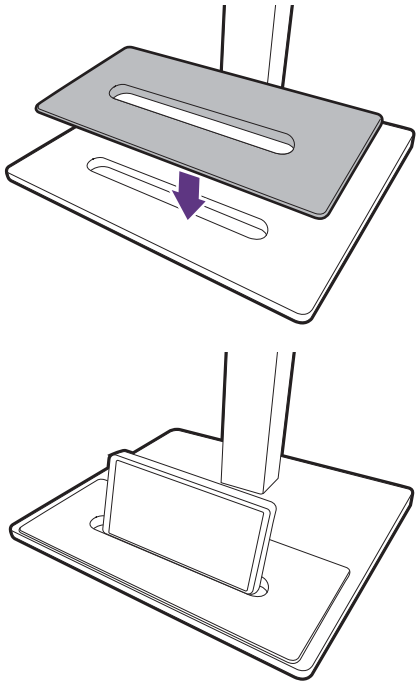

6. Connect the power cable to the monitor.

Plug one end of the power cord into the socket labelled ~ on the rear of the monitor. Do not connect the other end to a power outlet just yet.

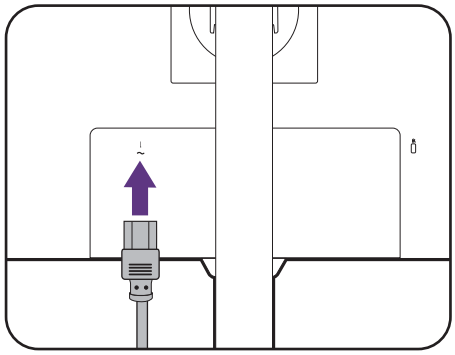

7. Connect-to and turn-on the power.

Plug the other end of the power cord into a power outlet and turn it on.

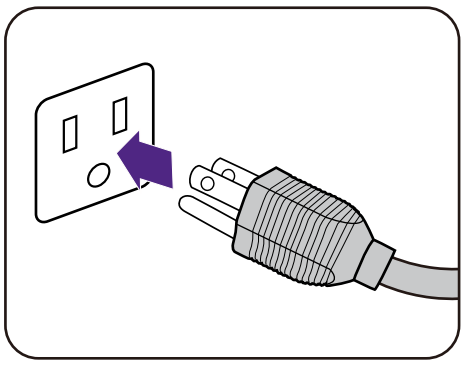

Picture may differ from product supplied for your region.

Turn on the monitor by pressing the power button on the monitor.

Turn on the computer too.

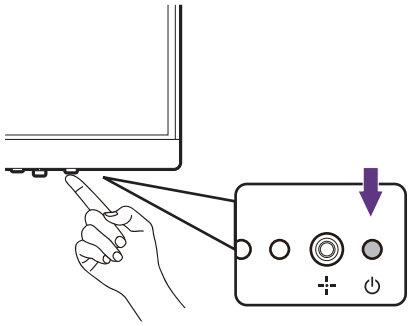

To extend the service life of the product, we recommend that you use your computer's power management function.

How to detach the stand and the base

1. Prepare the monitor and area.

Turn off the monitor and the power before unplugging the power cable. Turn off the computer before unplugging the monitor signal cable.

Gently lift the display up and extend the stand to the maximum extended position.

Protect the monitor and screen by clearing a flat open area on your desk and placing a soft item like a towel on the desk for padding, before laying the screen face down on a flat clean padded surface.

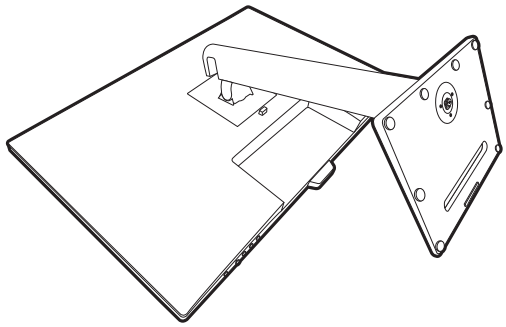

Please be careful to prevent damage to the monitor. Placing the screen surface on an object like a stapler or a mouse will crack the glass or damage the LCD substrate voiding your warranty. Sliding or scraping the monitor around on your desk will scratch or damage the monitor surround and controls.

2. Remove the monitor stand.

While pressing and holding the quick release button (❶), detach the stand from the monitor (❷ and ❸).

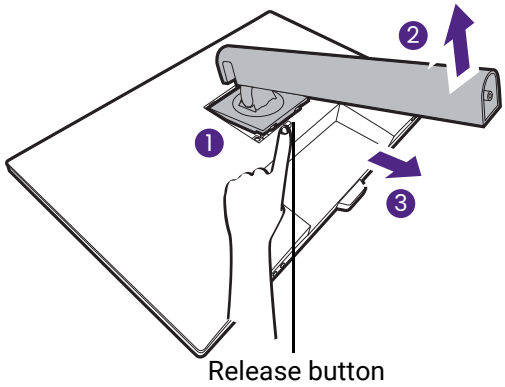

3. Remove the monitor base.

Release the thumbscrew on the bottom of the monitor base. And then detach the base from the stand.

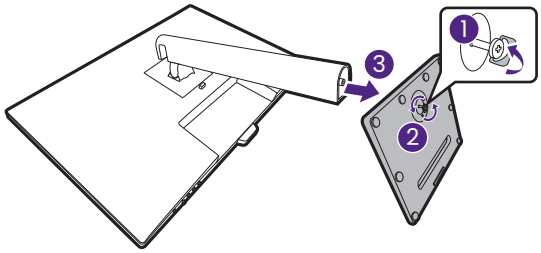

Adjusting the monitor height

To adjust the monitor height, hold both the top and the bottom of the monitor to lower the monitor or lift it up to the desired height.

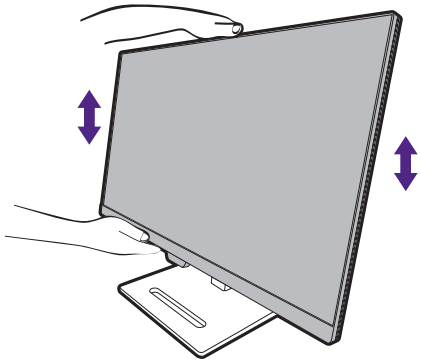

- Avoid placing hands on the upper or lower part of the height-adjustable stand or at the bottom of the monitor, as ascending or descending monitor might cause personal injuries. Keep children out of reach of the monitor while performing this operation.

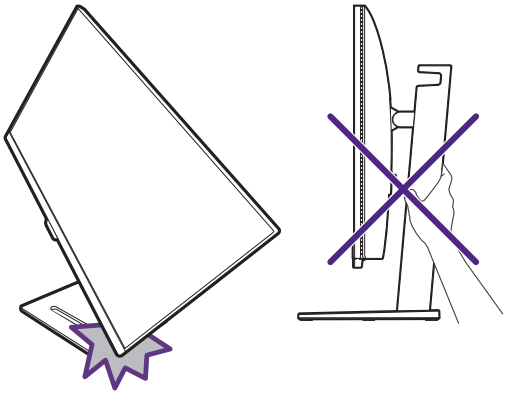

- If the monitor has been rotated to portrait mode and height adjustment is desired, you should be noted that the wide screen will keep the monitor from being lowered to its minimum height. If you have placed anything on the base cover, remove them before monitor pivot.

Rotating the monitor

1. Pivot the display.

Before rotating the monitor with a portrait viewing orientation, the display has to be rotated 90 degrees.

Right-click the desktop and select **Screen resolution** from the popup menu. Select **Portrait** in **Orientation**, and apply the setting.

Depending on the operation system on your PC, different procedures should be followed to adjust the screen orientation. Refer to the help document of your operation system for details.

2. Fully extend the monitor and tilt it.

Gently lift the display up and extend it to the maximum extended position. Then tilt the monitor.

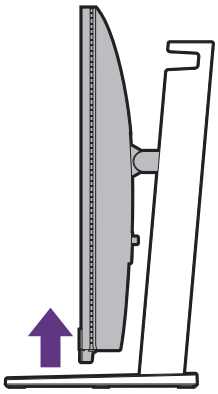

The monitor should be vertically extended to allow to rotate from landscape to portrait mode.

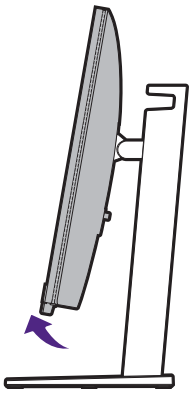

3. Rotate the monitor 90 degrees clockwise as illustrated.

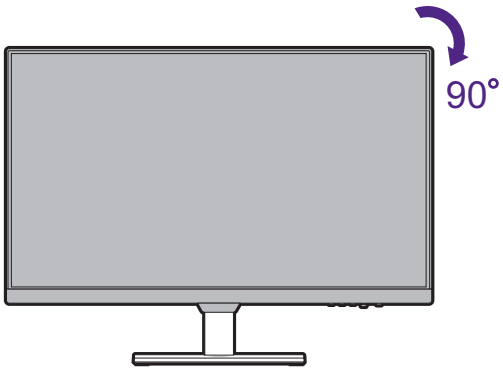

To avoid the edge of the LCD display hitting the monitor base surface while it is being rotated, do tilt and extend the monitor to the highest position before you start to rotate the display.
You should also make sure there are no obstacles around the monitor and there is enough room for cables. You might need to route the cables again via the cable clip after the rotation.

4. Adjust the monitor to the desired viewing angle.

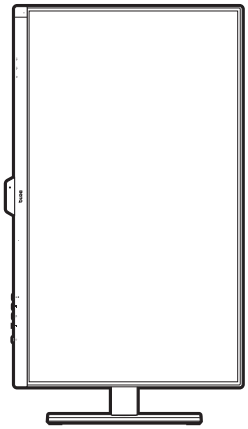

Viewing angle adjustment

You may position the screen to the desired angle with monitor tilt, swivel, and height adjustment functions. Refer to the product specifications on the website for details.

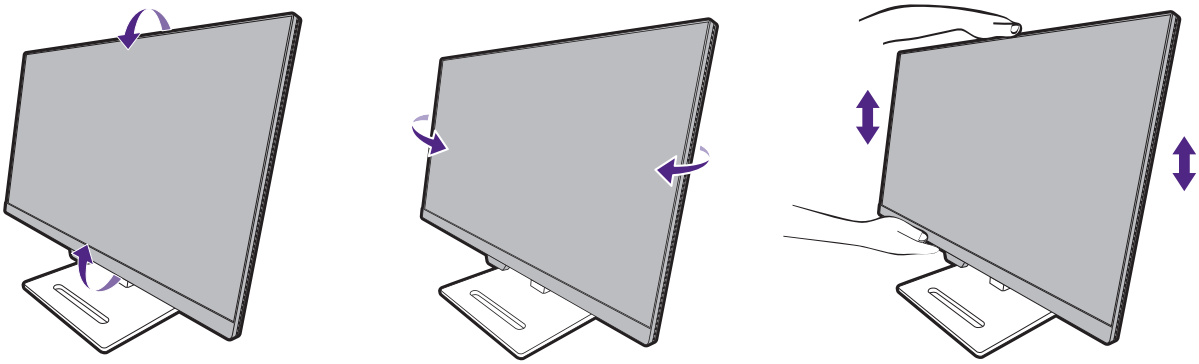

Using the monitor wall mounting kit (purchased separately)

The back of your LCD monitor has a VESA standard mount with 100mm pattern, allowing the installation of a wall mount bracket. Before starting to install a monitor wall mounting kit, please read the precautions carefully.

Precautions

- Install your monitor and monitor mounting kit on a wall with flat surface.
- Ensure that the wall material and the standard wall mount bracket (purchased separately) are stable enough to support the weight of the monitor. Refer to the product specifications on the website for weight information.
- Turn off the monitor and the power before disconnecting the cables from the LCD monitor.

1. Remove the monitor stand.

Lay the screen face down on a clean and well-padded surface. Detach the monitor stand as instructed in How to detach the stand and the base on page 25.

Then pull the monitor stand backward away from the monitor.

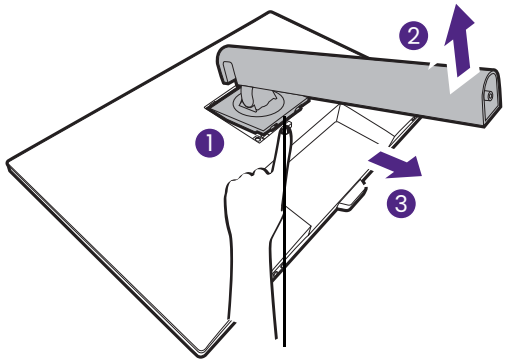

Release button

2. Remove the screws on the back cover.

Use a a cross-pointed screwdriver to release the screws on the back cover.The use of a magnetic-head screwdriver is recommended to avoid of losing the screws.

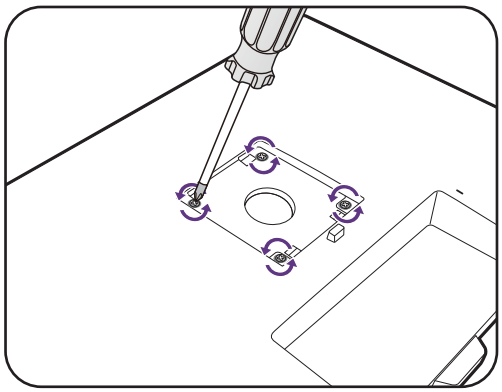

In case you intend to use your monitor on the stand in the future, please keep the monitor base, monitor stand, and screws somewhere safe for future use.

3. Follow the instruction manuals of the wall mount bracket you purchased to complete the installation.

Use four M4 x 10 mm screws to fix a VESA standard wall mount bracket to the monitor. Make sure that all screws are tightened and secured properly. Consult a professional technician or BenQ service for wall mount installation and safety precautions.

How to assemble your monitor hardware (for models without height adjustment stand)

- If the computer is turned on you must turn it off before continuing.
- Do not plug-in or turn-on the power to the monitor until instructed to do so.
- The illustrations in this document are for your reference only and may look different from the appearance of the product.
- The following illustrations are for your reference only. The location and available input and output jacks may vary depending on the purchased model.
- Avoid finger pressure on the screen surface.
- The latch on the monitor stand/base of the same model may vary by design, yet the installation, function, and product appearance are not affected in general. Be sure to assemble the monitor with the stand/base in the same package.

1. Attach the monitor stand and base.

Please be careful to prevent damage to the monitor. Placing the screen surface on an object like a stapler or a mouse will crack the glass or damage the LCD substrate voiding your warranty. Sliding or scraping the monitor around on your desk will scratch or damage the monitor surround and controls.

Protect the monitor and screen by clearing a flat open area on your desk and placing a soft item like the monitor packaging bag on the desk for padding.

Gently lay the screen face down on a flat clean padded surface.

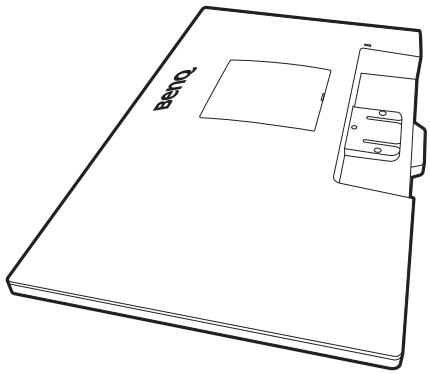

Attach the monitor stand to the monitor base as illustrated until it locks in place.

Pay attention to the sharp parts during assembly.

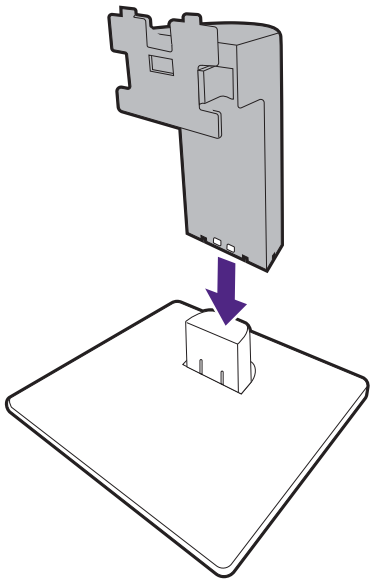

Orient and align the stand arm with the monitor, then push them together until they click and lock into place.

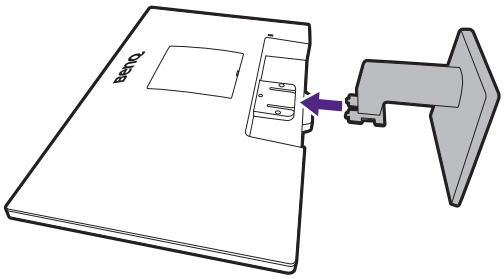

Carefully lift the monitor, turn it over and place it upright on its stand on a flat even surface.

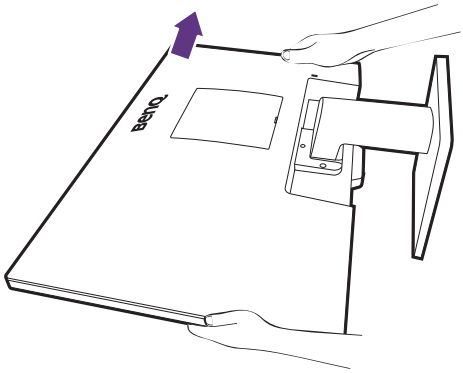

You should position the monitor and angle the screen to minimize unwanted reflections from other light sources.

If your monitor is an edge-to-edge monitor, it should be handled with care. Adjust the screen angle by placing your hands on the top and on the base of the monitor as illustrated. Excessive force on the display is prohibited.

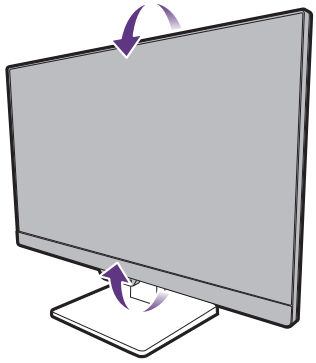

2. Connect the PC video cable

The video cables included in your package and the socket illustrations on the right may vary depending on the product supplied for your region.

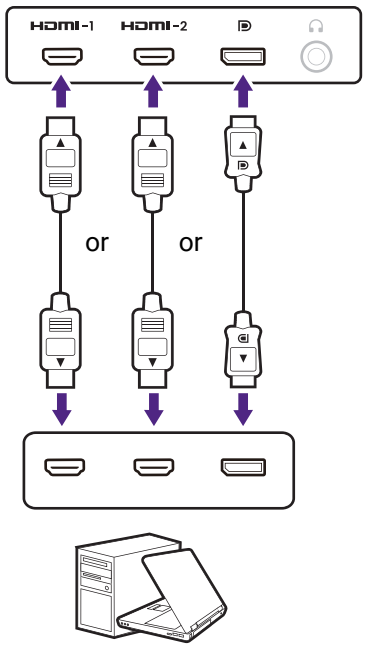

- Connect the plug of the HDMI cable to the HDMI port on the monitor. Connect the other end of the cable to the HDMI port of a digital output device.
- Connect the plug of the DP cable to the monitor video socket. Connect the other end of the cable to the computer video socket.

Tighten all finger screws to prevent the plugs from accidently falling out during use.

3. Connect the headphone.

You may connect headphones to the headphone jack found below the rear of the monitor.

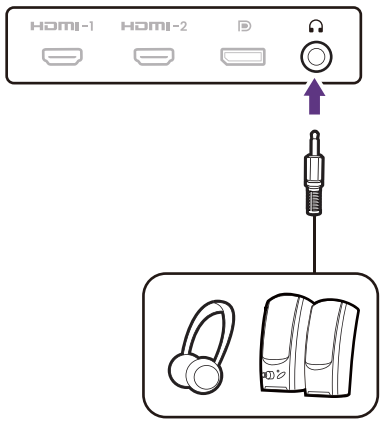

4. Connect the power cable to the monitor.

Plug one end of the power cord into the socket labelled ~ on the rear of the monitor. Do not connect the other end to a power outlet just yet.

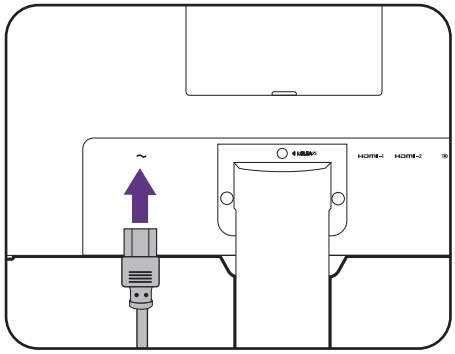

5. Connect-to and turn-on the power.

Plug the other end of the power cord into a power outlet and turn it on.

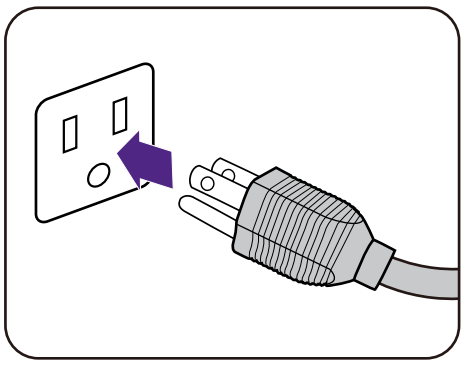

Picture may differ from product supplied for your region.

Turn on the monitor by pressing the power button on the monitor.

Turn on the computer too.

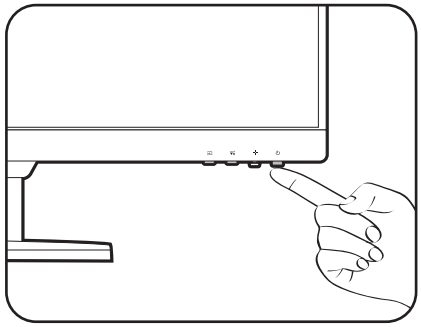

To extend the service life of the product, we recommend that you use your computer's power management function.

How to detach the stand and the base

1. Prepare the monitor and area.

Turn off the monitor and the power before unplugging the power cable. Turn off the computer before unplugging the monitor signal cable.

Protect the monitor and screen by clearing a flat open area on your desk and placing a soft item like a towel on the desk for padding, before laying the screen face down on a flat clean padded surface.

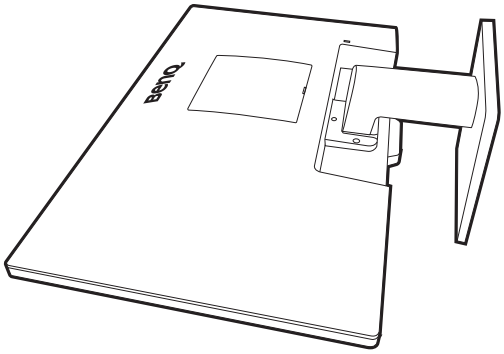

Please be careful to prevent damage to the monitor. Placing the screen surface on an object like a stapler or a mouse will crack the glass or damage the LCD substrate voiding your warranty. Sliding or scraping the monitor around on your desk will scratch or damage the monitor surround and controls.

2. Remove the monitor stand.

Push down the stand gently until you cannot go further so you can see the release button clearly.

Insert a pointed object such as a screwdriver to the hole above the monitor stand arm, and then push the screwdriver against the release button inside the hole. Pull the monitor stand backward away from the monitor.

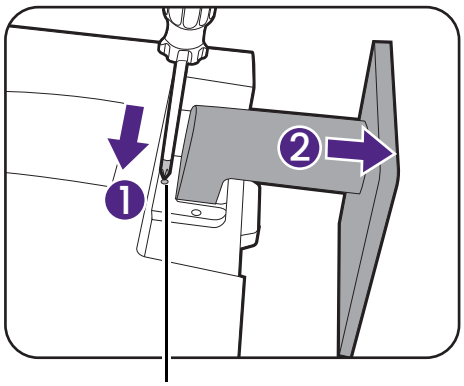

3. Remove the monitor base.

Hold the monitor stand arm with one hand, and push the locking clips to detach the monitor base from the stand arm.

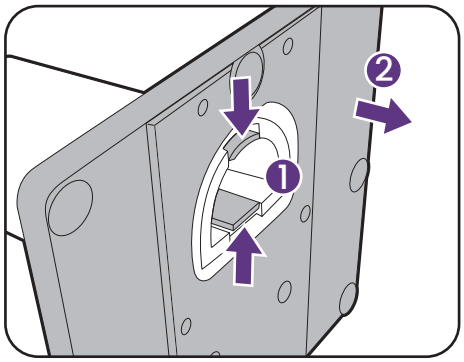

Using the monitor wall mounting kit (purchased separately)

The back of your LCD monitor has a VESA standard mount with 100mm pattern, allowing the installation of a wall mount bracket. Before starting to install a monitor wall mounting kit, please read the precautions carefully.

Precautions:

- Install your monitor and monitor mounting kit on a wall with flat surface.
- Ensure that the wall material and the standard wall mount bracket (purchased separately) are stable enough to support the weight of the monitor. Refer to the product specifications on the website for weight information.
- Turn off the monitor and the power before disconnecting the cables from the LCD monitor.

1. Remove the monitor stand.

Lay the screen face down on a clean and well-padded surface. Detach the monitor stand as instructed in How to detach the stand and the base on page 34.

Then pull the monitor stand backward away from the monitor.

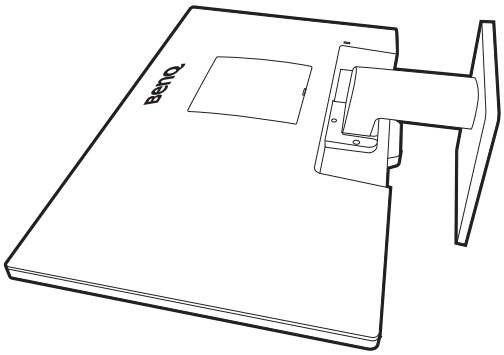

2. Remove the VESA cover.

Remove the VESA cover with an opening pry tool or a flat-head screwdriver (purchased separately).

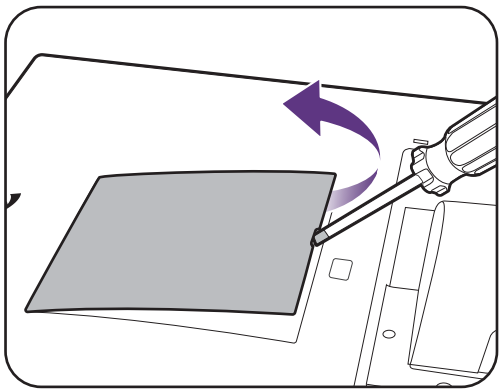

3. Remove the screws on the back cover.

Use a a cross-pointed screwdriver to release the screws on the back cover.The use of a magnetic-head screwdriver is recommended to avoid of losing the screws.

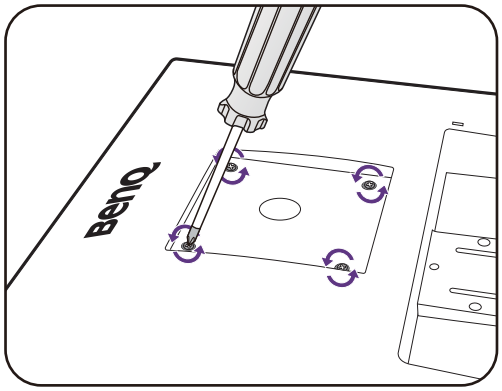

In case you intend to use your monitor on the stand in the future, please keep the VESA cover, monitor base, monitor stand, and screws somewhere safe for future use.

4. Follow the instruction manuals of the wall mount bracket you purchased to complete the installation.

Use four M4 x 10 mm screws to fix a VESA standard wall mount bracket to the monitor. Make sure that all screws are tightened and secured properly. Consult a professional technician or BenQ service for wall mount installation and safety precautions.

How to adjust your monitor

The illustrations and the images shown in this document are for your reference. The actual content may vary by the product supplied for you.

The control panel

GW2790QT/GW3290QT

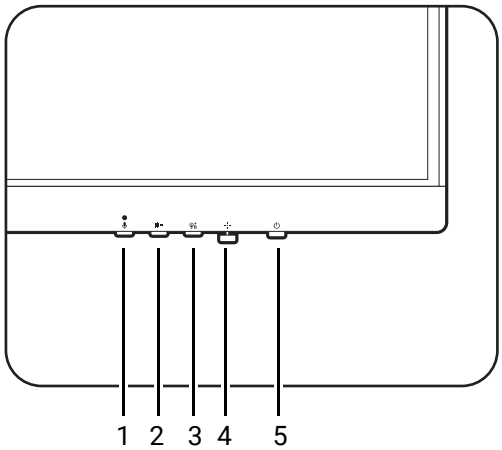

No.	Name	Description
1.	MIC key	Enables / mutes the built-in microphone.
2.	Noise Filter Speaker key	Accesses the setting menu of the Noise Filter Speaker. See Working with the Noise Filter Speakers (selected models only) on page 43 for more information.
3.	Low Blue Light Plus key	Accesses the setting menu of Low Blue Light Plus. See Working with Low Blue Light Plus on page 41 for more information.
4.	5-way controller	Accesses the functions or menu items as instructed by the on-screen icons. See 5-way controller and basic menu operations on page 38 for more information.
5.	Power key	Turns the power on or off.

GW2490/GW2490T/GW2790/GW2790T

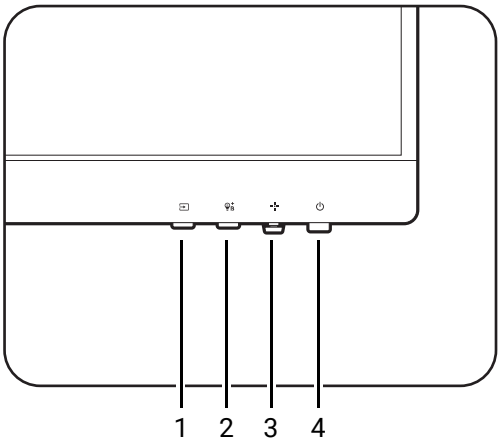

No.	Name	Description
1.	Input key	Accesses the source selection menu.
2.	Low Blue Light Plus key	Accesses the setting menu of Low Blue Light Plus. See Working with Low Blue Light Plus on page 41 for more information.
3.	5-way controller	Accesses the functions or menu items as instructed by the on-screen icons. See 5-way controller and basic menu operations on page 38 for more information.
4.	Power key	Turns the power on or off.

5-way controller and basic menu operations

The 5-way controller is located below the lower part of the front bezel. While sitting in front of the monitor, move the controller to the directions instructed by the on-screen icons for menu navigation and operations.

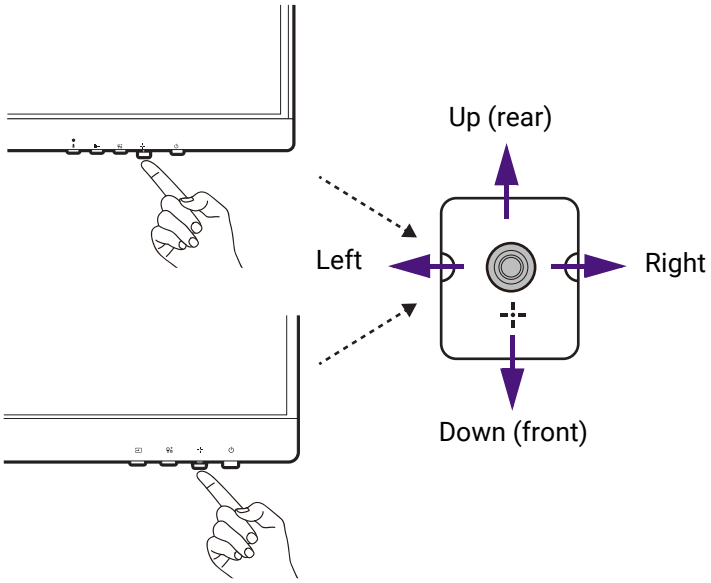

OSD icon	5-way controller operation	Function
(When no menu has been activated)		
N/A	Press the 5-way controller	Activates the **Quick Menu**.
(When a menu has been activated)		
	Press	Confirms the selection.
	Move to the right	• Enters sub menus. • Confirms the selection.
	Move up	• Goes to the previous menu item. • For up / increase adjustment.
	Move down	• Goes to the next menu item. • For down / decrease adjustment.
	Move to the left	• Returns to the previous menu. • Exits OSD menu.

All OSD (On Screen Display) menus can be accessed by the control keys. You can use the OSD menu to adjust all the settings on your monitor. Available menu options may vary depending on the input sources, functions and settings.

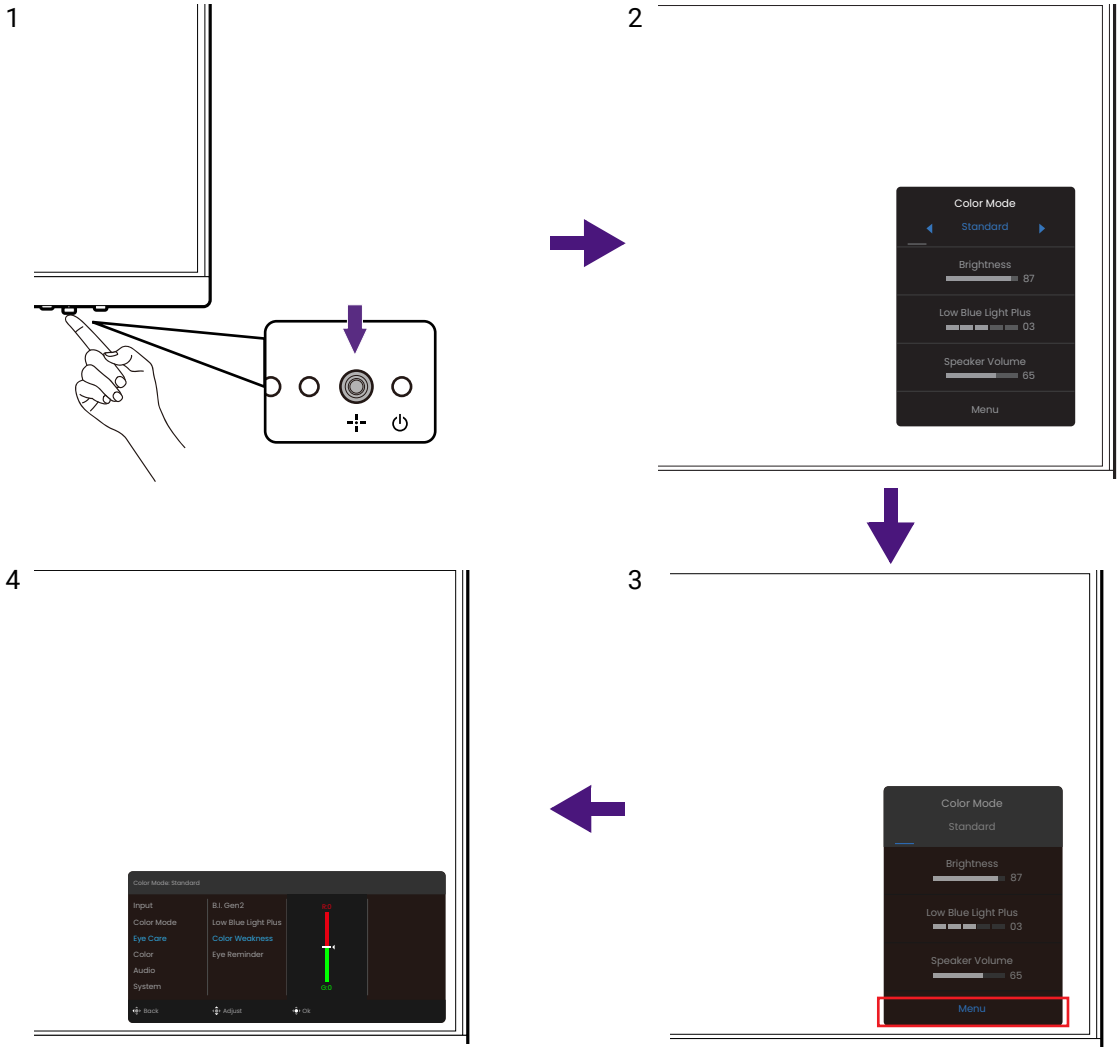

1. Press the 5-way controller.
2. The **Quick Menu** is displayed.
3. Select **Menu** to access the main menu.
4. On the main menu, follow the on-screen icons on the bottom of the menu to make adjustments or selection. See Navigating the main menu on page 47 for details on the menu options.

- OSD = On Screen Display.
  The hot keys only operate while the main menu is not currently displaying. Hot key displays will disappear after a few seconds of no key activity.
- To unlock the OSD controls, press and hold any key for 5 seconds.

Switching the inputs quickly (selected models only)

Check The control panel on page 36 for the available controls of the purchased model.

1. Press the Input key on the monitor to bring up the input source selection menu.
2. Press the Input key repeatedly to cycle through available video sources.
3. Press to confirm.

Working with the **Quick Menu**

The **Quick Menu** is a quick access to change some monitor settings frequently adjusted. It also provides the access to the main menu.

• Press to bring up the **Quick Menu**.

• Press / to different settings.

• Go to **Menu** and press to access the main menu.

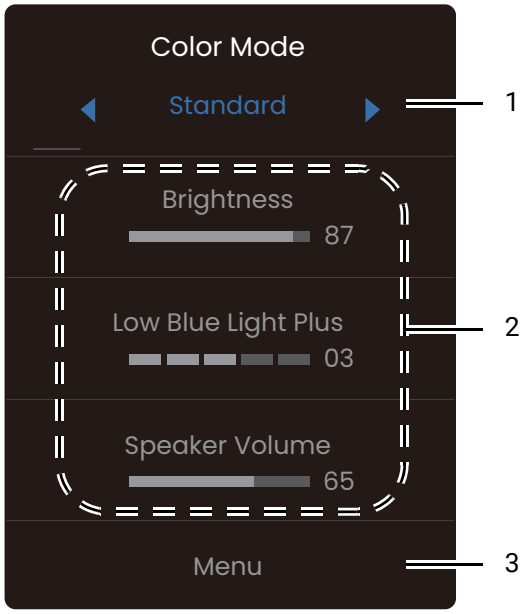

No.	Item	Description
1	Color mode	Press / to cycle through the available color mode. See Color Mode menu on page 49 for more information.
2	Quick settings	Press / to make adjustments. The default settings vary by color mode and may not be adjustable on certain color modes. See Available menu options to each Color Mode on page 41 for available options on each color mode.
3	Main menu	Accesses the main menu. See Navigating the main menu on page 47 for more information.

Adjusting display mode

To display images of aspect ratios other than your monitor aspect ratio and sizes other than your display size, you can adjust the display mode on the monitor

1. Press to bring up the **Quick Menu**.
2. Go to **Menu** > **System** > **Display Mode**.
3. Select an appropriate display mode. The setting will take effect immediately.

Choosing an appropriate picture mode (color mode)

Your monitor provides various picture modes that are suitable for different types of images. See Color Mode menu on page 49 for all the available picture modes.

1. Press to bring up the **Quick Menu**.
2. Go to **Menu** > **Color Mode** for a desired picture mode.

Working with **Low Blue Light Plus**

The Low Blue Light Plus technology helps decrease the blue light emitted from the display to reduce the risk of blue light exposure to your eyes.

You can reduce the blue light as desired regardless of color mode. To adjust **Low Blue Light Plus** setting, press the Low Blue Light Plus key and press / for adjustment. The number of selected bars indicates how much blue light is reduced. The more bars are selected, the more blue light is reduced.

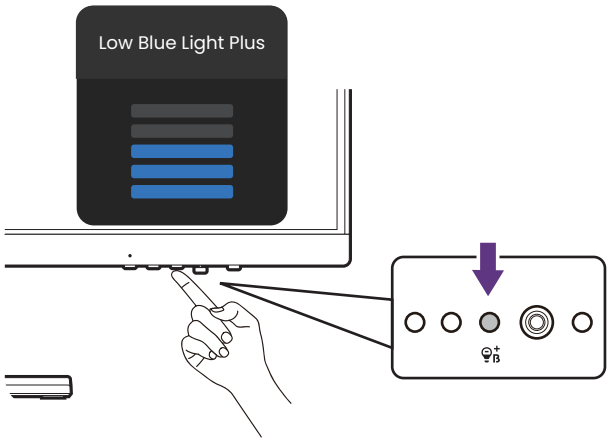

Available control buttons vary by model. The illustrations in this document are for your reference only and may look different from the appearance of your product.

Available menu options to each **Color Mode**

Depending on the Color Mode you just set, the available options for each color adjustment may vary. The list is for reference only as available options also vary by input. Menu options that are not available will become grayed out.

Color Mode Options	Standard	Movie / Cinema	Game	User	Care Mode	Coding	M-book	ePaper
B.I. Gen2	V	V	V	V	V	V	V	V
Dynamic Contrast	X	V(1)	V(1)	X	X	X	X	X
Color Temperature	V(2)	X	X	V	X	X	V	X
Gamma	V	X	X	V	X	X	X	X
Brightness	V	V	V	V	V	V	V	V
Contrast	V	V	X	V	V	V	X	V
Sharpness	V	V	V	V	V	V	V	V

- V: Available.
- X: Not available.
- (1): Available only when **B.I. Gen2** is disabled.
- (2): **Color Temperature** > **User Define** is available only when the **Color Mode** is set to **User** or **M-book**.

Adjustable OSD settings

While some settings (e.g., OSD language) are changed and take effect immediately regardless of other monitor settings or input, most OSD settings can be adjusted and saved to go with color modes. As a color mode is selected, the desired settings are applied.

Item	Description
B.I. Gen2	Saved and applied by color mode switch.
Low Blue Light Plus	
Color Weakness	
Brightness	
Sharpness	
Dynamic Contrast	
Contrast	
Color Temperature	
Gamma	

Adjusting screen brightness automatically (Brightness Intelligence Gen2)

The Brightness Intelligence Gen2 function works with certain picture modes (color modes) only. If it is not available, its menu options will become grayed out.

The built-in light sensor works with Brightness Intelligence Gen2 technology to detect the ambient light, image brightness and contrast, and then balance the screen automatically. It helps keep image details as well as to reduce eye strain.

1. Press to bring up the **Quick Menu**.
2. Go to **Menu** > **Eye Care** > **B.I. Gen2** > **ON** to enable this function.

- The performance of Brightness Intelligence Gen2 may be impacted by the light sources and the monitor tilt angle. If you prefer to manually adjust the brightness again as desired, go to **Menu** > **Color** > **B.I. Brightness**. See Brightness / B.I. Brightness on page 53 for more information.
- The monitor also works with the eye-care software named **Eye-CareU**, which helps control the eye-care related settings and keep you from eye strain by managing the screen time. Access the software and its user manual from Support.BenQ.com.

Enabling color vision accessibility (**Color Weakness**)

Color Weakness is accessibility that helps people with color vision deficiency to distinguish colors. You are provided with **Red Filter** and **Green Filter** on this monitor. Choose one as needed.

1. Press to bring up the **Quick Menu**.
2. Go to **Menu** > **Eye Care** > **Color Weakness**.
3. Choose either **Red Filter** or **Green Filter**.
4. Adjust the value of the filter. A stronger effect is produced as the value increases.

Working with the built-in Noise Cancellation Microphone (selected models only)

Check The control panel on page 36 for the available controls of the purchased model.

If the video source is via USB-C™ port, you can press the MIC key to turn on the built-in microphone. Check MIC LED indicator on page 43 for more information.

With the Noise Cancellation technology, the digital microphone filters out background noises on your side and transmits only clear vocals. To change the Noise Cancellation setting, go to **Audio** > **Microphone** > **Noise Cancellation**. See Noise Cancellation on page 56 for more information.

To adjust the volume or change the settings, go to **Audio** > **Microphone**. See Microphone on page 56 for more information.

To turn off the built-in microphone, press the MIC key again.

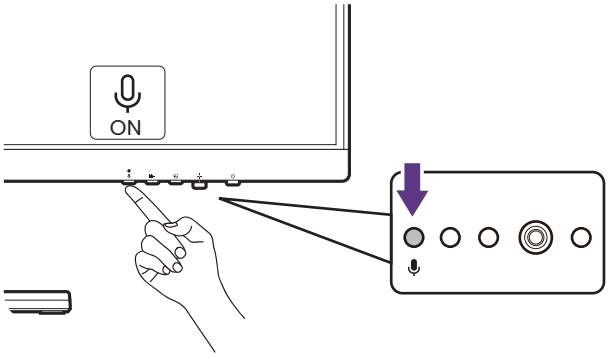

MIC LED indicator

Light color	Description
Green	The microphone is turned on and ready for use.
Off	The microphone is not available.

Working with the Noise Filter Speakers (selected models only)

Check The control panel on page 36 for the available controls of the purchased model.

The built-in speakers feature the Noise Filter that help filter out unwanted background noises from the speakers during online communication. This feature is recommended for conference calls only.

1. To enable Noise Filter, make sure the speakers have been turned on from **Audio** > **Speaker**.
2. Press the Noise Filter Speaker key to bring up the hotkey menu and set the sensitivity of the Noise Filter. Select **High** to reduce as much background noises as possible so you can hear clear vocals.

Note that without background noises, the overall volume may be lower than expected. Adjust volume if needed.

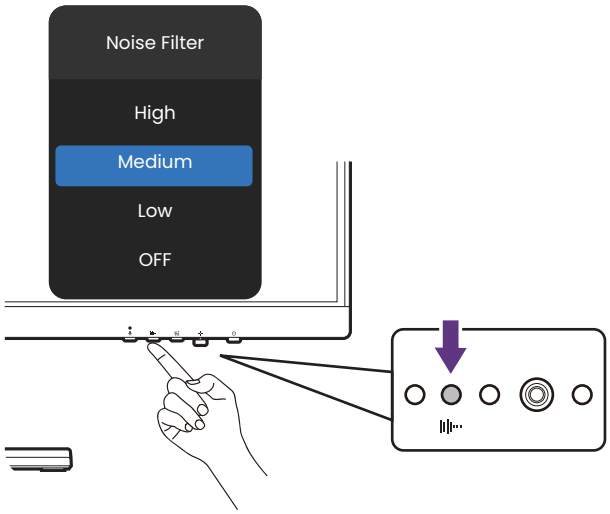

Charging the connected device via USB-C™ port (selected models only)

Available for models with USB-C™ inputs. Check Back view on page 16 for the available ports of the purchased model.

The USB-C™ port on the rear of your monitor supports power delivery in standby mode yet it is disabled by default. If video source via USB-C™ port is detected, you will be prompted to enable USB-C™ power delivery function in monitor standby mode. Select **YES** to proceed.

If **USB-C Awake** from **System** has been turned to **ON**, the power delivery will start without further notification.

The USB-C™ port on the lower part of the front bezel not only works as a downstream port but also helps charge the connected USB devices.

The maximum power delivery of each USB-C™ port varies. To charge a device properly, check its charging specification first and make sure an appropriate USB-C™ port is connected.

Icon	Power delivery
	65W
	7.5W

Connecting multiple monitors via MST (Multi-Stream Transport)(selected models only)

- Available for models with a DisplayPort output. Check Back view on page 16 for the available ports of the purchased model.
- This function is not available on MacBook series products.

With connection via the DP-IN and DP-OUT ports, you can output content to one or up to 4 monitors via MST function.

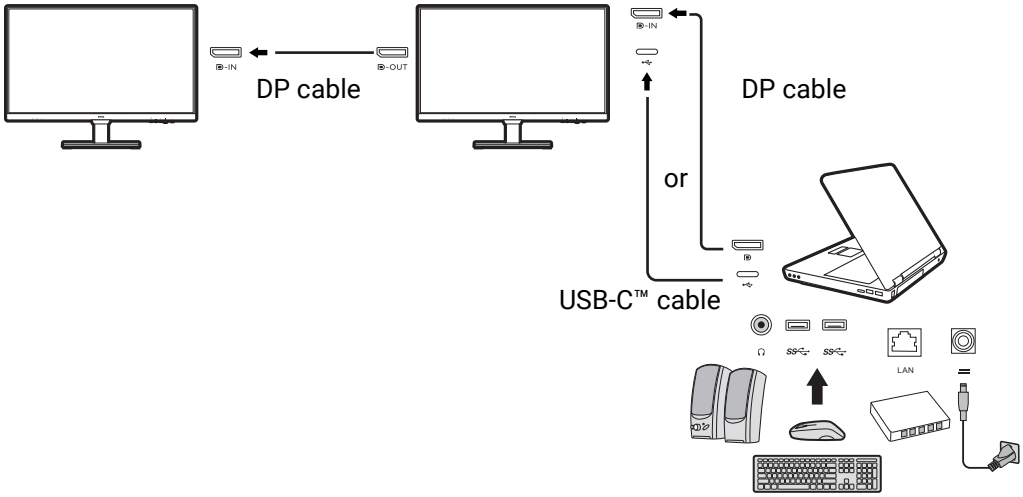

1. Connect your laptop to the USB-C™ / DP port on the monitor using a USB-C™ / DP cable. Select **YES** to enable USB-C™ power delivery in monitor standby mode if you are prompted to. The USB-C™ port supplies power to the laptop then even when the monitor is in standby mode.
2. Go to **System** > **MST** > **ON**. Note the OSD menu can be launched and configured only when input signal is detected.
3. Connect the second monitor to the first one using a DP cable as illustrated.
4. Follow Step 3 to connect the third and the fourth monitors if desired.
5. Power on the laptop and the monitors. On all the connected monitors, check the configurations as described in Step 2.
6. On you laptop, decide the way you want the content to be displayed on the connected monitors: **Duplicate**, **Extend**, or **Projector only**. Additional software (purchased separately) may be used to manage the display. Refer to the manual of the purchased software for more information.

Supported resolution

To perform MST, a limited number of compatible and connected monitors is required to ensure image quality. The following information shows the image resolution available to each monitor.

Configuration	1st monitor (GW2790QT/GW3290QT)	2nd monitor (GW2790QT/GW3290QT or a compatible BenQ monitor)	3rd monitor (GW2790QT/GW3290QT or a compatible BenQ monitor)	4th monitor (GW2790QT/GW3290QT or a compatible BenQ monitor)
1	2560 x 1440 (60Hz)	2560 x 1440 (60Hz)	N/A	N/A
2	2560 x 1440 (60Hz)	2560 x 1440 (60Hz)	1920 x 1080 (60Hz)	N/A
3	2560 x 1440 (60Hz)	1920 x 1080 (60Hz)	1920 x 1080 (60Hz)	1920 x 1080 (60Hz)
4	1920 x 1080 (60Hz)	1920 x 1080 (60Hz)	1920 x 1080 (60Hz)	1920 x 1080 (60Hz)

Make sure the graphic card on your computer supports DP 1.4 for MST. Please also be noted that the supported number of monitors for connection may vary by graphic card. To find out the compatibility of your graphic card, check its specifications or contact its manufacturer.

Working with a Mac series product

You can connect your monitor to a Mac series product. Note the compatibility is up to the performance and specifications of the Mac chip on your Mac product and may be updated without prior notice.

- When connecting your monitor to a Mac product, direct connection via Thunderbolt 3 or USB-C™ cable (if available on both Mac and the monitor) is recommended to ensure good image quality. See Connect the PC video cable on page 22 for details.
- To reduce the color difference, you are recommended to set the picture mode (color mode) of your monitor to **M-book**, **Display P3**, or **DCI-P3** mode (if available). See Color Mode menu on page 49 for details.
- If your monitor supports certain BenQ software, check the software webpage from www.BenQ.com to see if they work on your Mac product.

If you have any inquiries about the compatibilities with Mac products, visit Support.BenQ.com and look for related topics from **FAQ** or **Knowledge**.

Navigating the main menu

You can use the OSD (On Screen Display) menu to adjust all the settings on your monitor.

Press to bring up the **Quick Menu** and select **Menu** to access the main menu. See 5-way controller and basic menu operations on page 38 for details.

Available menu options may vary depending on the input sources, functions and settings. Menu options that are not available will become grayed out. And keys that are not available will be disabled and the corresponding OSD icons will disappear. For models without certain functions, their settings and related items will not appear on the menu.

The OSD menu languages may differ from the product supplied to your region, see Language on page 58 under **System** and **OSD Settings** for more details.

For more information on each menu, please refer to the following pages:

- Input menu on page 48
- Color Mode menu on page 49
- Eye Care menu on page 51
- Color menu on page 53
- Audio menu on page 55
- System menu on page 57

Input menu

Available menu options may vary depending on the input sources, functions and settings. Menu options that are not available will become grayed out. And keys that are not available will be disabled and the corresponding OSD icons will disappear. For models without certain functions, their settings and related items will not appear on the menu.

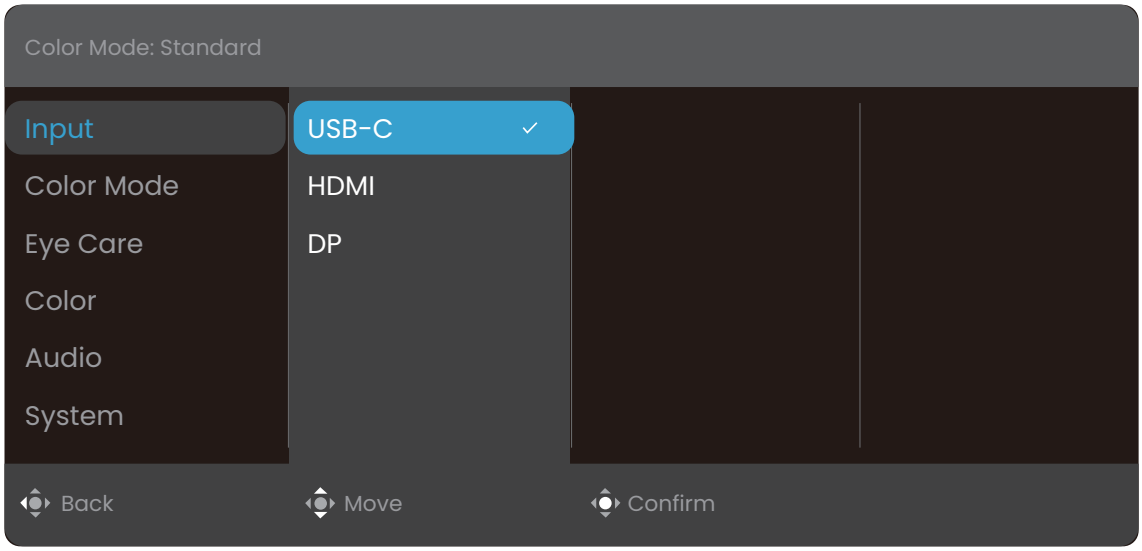

1. Press to bring up the **Quick Menu**.
2. Select **Menu** from the **Quick Menu**.
3. Use or to select **Input**.
4. Select to go to a sub menu, and then use or to select a menu item.
5. Use or to make adjustment, or use to make selection.
6. To return to the previous menu, select .
7. To exit the menu, select .

Item	Function	Range
Input	Use this to change the input to that appropriate to your video cable connection type.	(Models with USB-C™) • **USB-C** • **HDMI** • **DP** (Models without USB-C™) • **HDMI1** • **HDMI2** • **DP**

Color Mode menu

Available menu options may vary depending on the input sources, functions and settings. Menu options that are not available will become grayed out. And keys that are not available will be disabled and the corresponding OSD icons will disappear. For models without certain functions, their settings and related items will not appear on the menu.

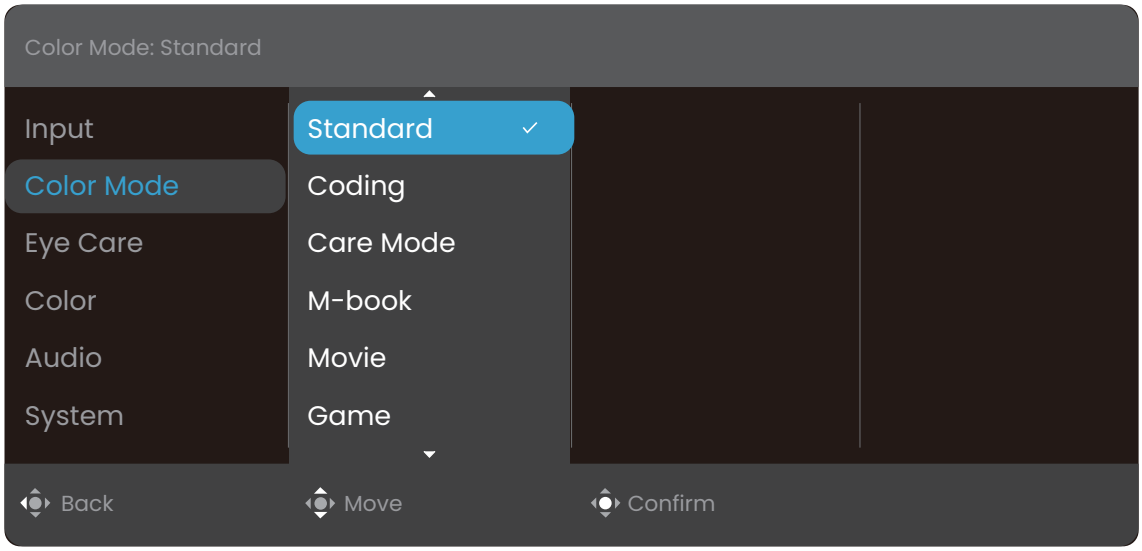

1. Press to bring up the **Quick Menu**.
2. Select **Menu** from the **Quick Menu**.
3. Use or to select **Color Mode**.
4. Select to go to a sub menu, and then use or to select a menu item.
5. Use or to make adjustment, or use to make selection.
6. To return to the previous menu, select .
7. To exit the menu, select .

Item	Function	Range
Standard	For basic PC application.	
Coding	For coding or programming with high contrast and saturation.	
Care Mode	For online learning with low contrast and high saturation.	
M-book	Minimizes the visual differences between the monitor and the connected MacBook series product.	
Movie / Cinema	For viewing videos. Available items may vary by model.	
Game	For playing video games.	
ePaper	For reading e-books or documents in black and white with suitable on-screen brightness and clear texts.	

Item	Function	Range
User	Applies a combination of picture settings defined by users.	

Eye Care menu

Available menu options may vary depending on the input sources, functions and settings. Menu options that are not available will become grayed out. And keys that are not available will be disabled and the corresponding OSD icons will disappear. For models without certain functions, their settings and related items will not appear on the menu.

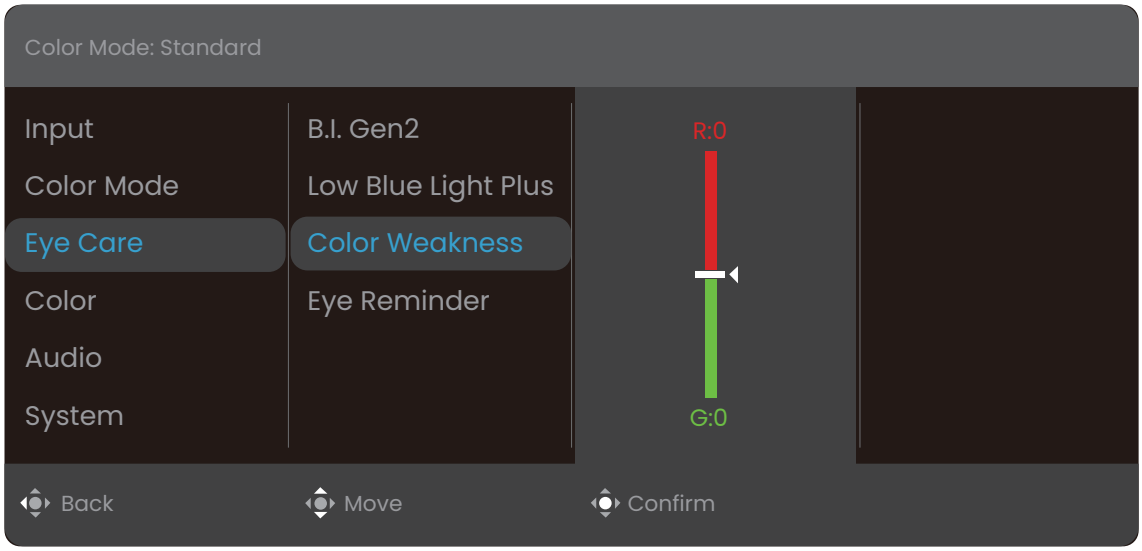

1. Press to bring up the **Quick Menu**.
2. Select **Menu** from the **Quick Menu**.
3. Use or to select **Eye Care**.
4. Select to go to a sub menu, and then use or to select a menu item.
5. Use or to make adjustment, or use to make selection.
6. To return to the previous menu, select .
7. To exit the menu, select .

Item	Function		Range
B.I. Gen2	Turns the Brightness Intelligence Gen2 function on or off. The built-in light sensor works with Brightness Intelligence technology to detect the ambient light, image brightness and contrast, and then balance the screen automatically. See Adjusting screen brightness automatically (Brightness Intelligence Gen2) on page 42 for more information.		• **ON** • **OFF**
	Light Meter	Sets to display the light condition around the monitor on the screen.	• **ON** • **OFF**
Low Blue Light Plus	Decreases the blue light emitted from the display to reduce the risk of blue light exposure to your eyes. See Working with Low Blue Light Plus on page 41 for more information.		0 ~ 5

Item	Function		Range
Color Weakness	Adjusts color matching representation for people with color vision deficiency to distinguish colors easily.		
	Red Filter	Decides the effect produced by the red filter. A stronger effect is produced as the value increases.	0 ~ 10
	Green Filter	Decides the effect produced by the green filter. A stronger effect is produced as the value increases.	0 ~ 10
Eye Reminder	Allows the built-in proximity sensor to detect your presence within the range of approximately 90 cm. If the sensor detects your presence for more than the set period of time, the monitor displays a pop-up message that reminds you to rest your eyes.		• **OFF** • **30 min** • **45 min** • **60 min**

Color menu

Available menu options may vary depending on the input sources, functions and settings. Menu options that are not available will become grayed out. And keys that are not available will be disabled and the corresponding OSD icons will disappear. For models without certain functions, their settings and related items will not appear on the menu.

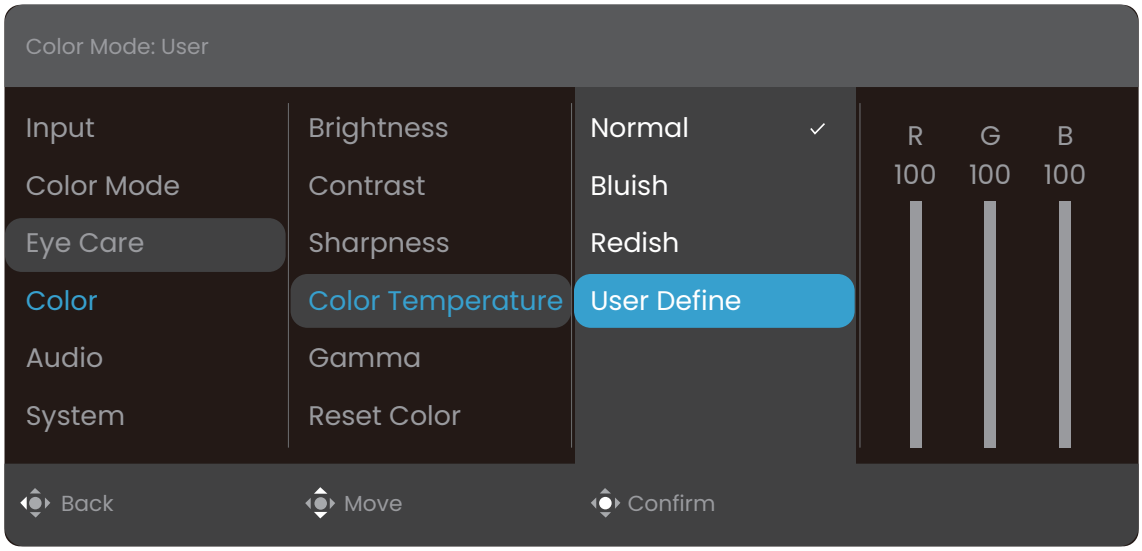

1. Press to bring up the **Quick Menu**.
2. Select **Menu** from the **Quick Menu**.
3. Use or to select **Color**.
4. Select to go to a sub menu, and then use or to select a menu item.
5. Use or to make adjustment, or use to make selection.
6. To return to the previous menu, select .
7. To exit the menu, select .

Item	Function	Range
Brightness / **B.I. Brightness**	Adjusts the balance between light and dark shades. **B.I. Brightness** is available when B.I. Gen2 function is enabled. See Adjusting screen brightness automatically (Brightness Intelligence Gen2) on page 42 for more information.	0 to 100
Contrast	Adjusts the degree of difference between darkness and lightness.	0 to 100
Sharpness	Adjusts the clarity and visibility of the edges of the subjects in the image.	1 to 10

Item	Function		Range
Color Temperature	**Normal**	Allows video and still photographs to be viewed with natural coloring. This is the factory default color.	
	Bluish	Applies a cool tint to the image and is factory pre-set to the PC industry standard white color.	
	Reddish	Applies a warm tint to the image and is factory pre-set to the news print standard white color.	
	User Define	The blend of the Red, Green and Blue primary colors can be altered to change the color tint of the image. Go to the succeeding **R** (red), **G** (green), and **B** (blue) menus to change the settings. Decreasing one or more of the colors will reduce their respective influence on the color tint of the image. (e.g. if you reduce the Blue level the image will gradually take on a yellowish tint. If you reduce Green, the image will become a magenta tint.)	• **R** (0~100) • **G** (0~100) • **B** (0~100)
Gamma	Adjusts the tone luminance. The default value is **3** (the standard value for Windows).		• **1** • **2** • **3** • **4** • **5**
Reset Color	Resets the custom color settings to the factory defaults.		• **YES** • **NO**

Audio menu

Available menu options may vary depending on the input sources, functions and settings. Menu options that are not available will become grayed out. And keys that are not available will be disabled and the corresponding OSD icons will disappear. For models without certain functions, their settings and related items will not appear on the menu.

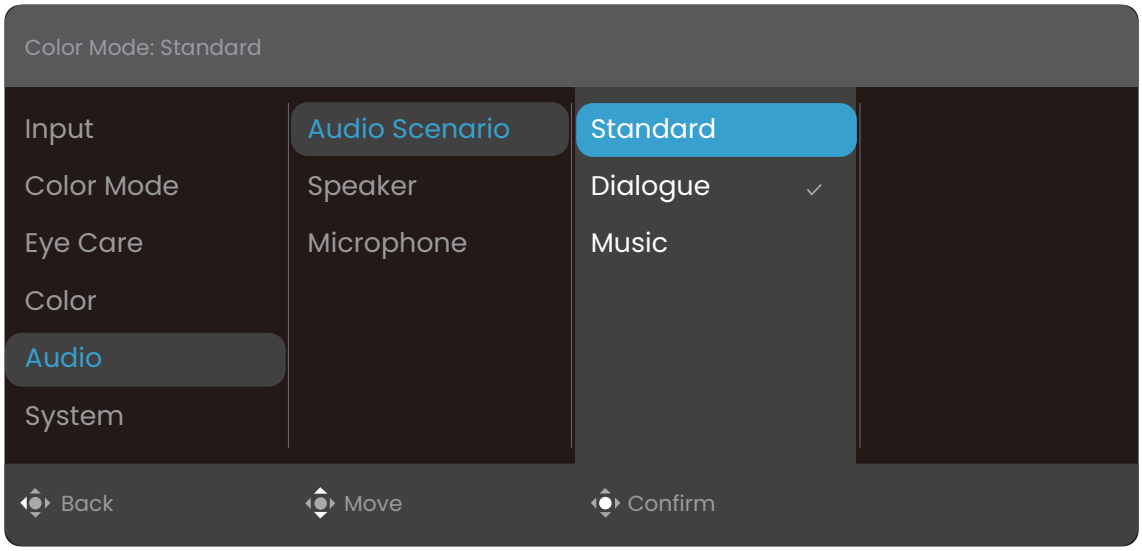

1. Press to bring up the **Quick Menu**.
2. Select **Menu** from the **Quick Menu**.
3. Use or to select **Audio**.
4. Select to go to a sub menu, and then use or to select a menu item.
5. Use or to make adjustment, or use to make selection.
6. To return to the previous menu, select .
7. To exit the menu, select .

Item	Function		Range
Audio Scenario	Selects one of the equalizers to obtain the best audio effect in certain scenarios.		
	Standard	Balances all settings for use without a specific scenario.	
	Dialogue	Cancels noise to improve sound clarity.	
	Music	Keeps the music and the vocal in harmony as if in live.	

Item	Function		Range
Speaker	Adjusts the speaker settings.		
	ON / **OFF**	Turns the built-in speakers on or off.	
	Speaker Volume	Adjusts the speaker volume.	0 ~ 100
	Noise Filter (selected models only)	Reduces unwanted background noises from the built-in speakers. This determines the sensitivity of Noise Filter.	• **High** • **Medium** • **Low** • **OFF**
Microphone (selected models only)	Adjusts the microphone settings.		
	ON / **OFF**	Turns the built-in microphone on or off.	
	MIC Volume	Adjusts the microphone volume.	0 ~ 10
	Noise Cancellation	Reduces unwanted noises around. This determines the sensitivity of the built-in microphone. If the setting is **High**, more noises are reduced. At this moment the vocal may not be so clear if it is not close enough to the microphone.	• **High** • **Medium** • **Low** • **OFF**

System menu

Available menu options may vary depending on the input sources, functions and settings. Menu options that are not available will become grayed out. And keys that are not available will be disabled and the corresponding OSD icons will disappear. For models without certain functions, their settings and related items will not appear on the menu.

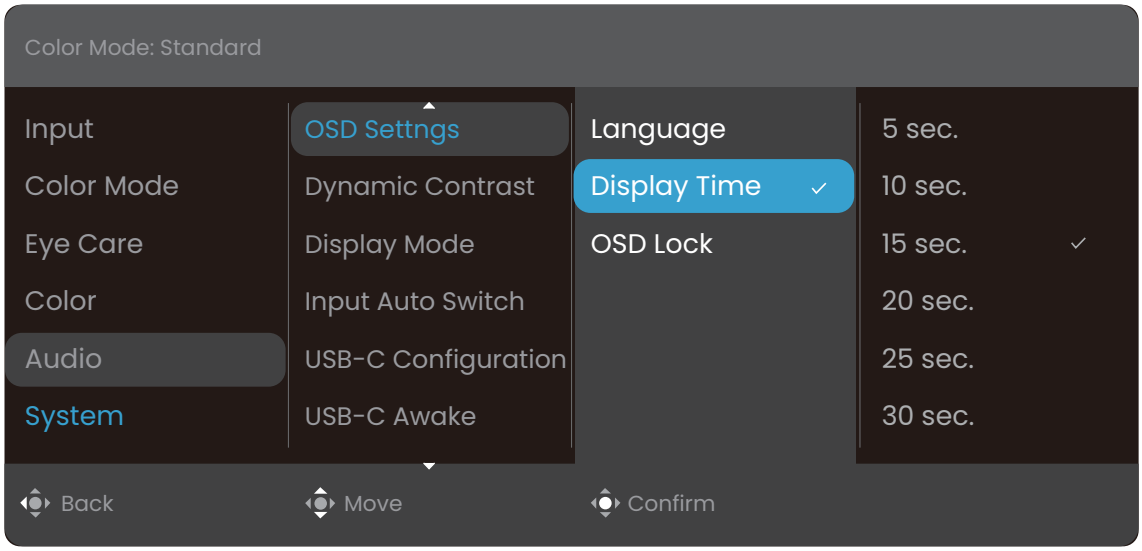

1. Press to bring up the **Quick Menu**.
2. Select **Menu** from the **Quick Menu**.
3. Use or to select **System**.
4. Select to go to a sub menu, and then use or to select a menu item.
5. Use or to make adjustment, or use to make selection.
6. To return to the previous menu, select .
7. To exit the menu, select .

Item	Function		Range
OSD Settings	**Language**	Sets the OSD menu language. The language options displayed on your OSD may differ from those shown on the right, depending on the product supplied in your region.	• **English** • **Français** • **Deutsch** • **Italiano** • **Español** • **Polski** • **Česky** • **Magyar** • **Română** • **Nederlands** • **Русский** • **Svenska** • **Português** • **日本語** • **繁體中文** • **简体中文** • العربية • 한국어
	Display Time	Adjusts the display time of the OSD menu.	• **5 sec.** • **10 sec.** • **15 sec.** • **20 sec.** • **25 sec.** • **30 sec.**
	OSD Lock	Prevents all the monitor settings from being accidentally changed. When this function is activated, the OSD controls and hotkey operations will be disabled. To unlock the OSD controls, press and hold any key for 5 seconds.	
Dynamic Contrast	The function is to automatically detect the distribution of an input visual signal, and then to create the optimal contrast.		0 ~ 5

Item	Function		Range
Display Mode	This feature is provided to allow aspect ratios other than 16:9 to be displayed without geometric distortion. The options under **Display Mode** will be different depending on the input signal sources. Depending on your selection of **Mode**, different **Display Mode** option is pre-set. Change the setting if needed		
	Full	Scales the input image to fill the screen. Ideal for 16:9 aspect images.	
	Aspect	The input image is displayed without geometric distortion filling as much of the display as possible.	
Input Auto Switch	Sets to automatically detect the available input source.		• **ON** • **OFF**
USB-C Configuration (models with USB-C™)	Sets the refresh rate of the input video via USB-C™ port. The USB transmission speed changes accordingly due to USB-C™ technology limitation.		
	USB 3.2 Gen 1	Refresh rate: 2560 x 1440 @ 60Hz USB transmission speed: 5 Gbps	
	USB 2.0	Refresh rate: 2560 x 1440 @ 60Hz USB transmission speed: 480 Mbps	
USB-C Awake (models with USB-C™)	If this function is disabled, the USB-C™ port is not supplied with power while the monitor is in standby mode. To keep supplying power to the USB-C™ port in monitor's standby mode, change the setting to **ON**.		• **ON** • **OFF**
MST (selected models only)	Allows data transmission while multiple monitors are daisy-chained. Available only when the input source is DP or USB-C™.		• **ON** • **OFF**
AMA	Improves the gray level response time of the LCD panel.		• **OFF** • **High** • **Premium**
RGB PC Range	Determines the range of color scales. Select an option that matches the RGB range setting on the connected HDMI device.		• **Auto Detect** • **RGB (0~255)** • **RGB (16~235)**
DDC/CI	Allows the monitor settings to be set through the software on the PC. DDC/CI, short for Display Data Channel/Command Interface, which was developed by Video Electronics Standards Association (VESA). DDC/CI capability allows monitor controls to be sent via the software for remote diagnostics.		• **ON** • **OFF**

Item	Function	Range
Auto Power Off	Sets the time to power off the monitor automatically in power saving mode.	• **OFF** • **10 min** • **20 min** • **30 min**
Resolution Notice	Sets whether to display the resolution notice of the recommended resolution when a new input source is detected by the monitor.	• **ON** • **OFF**
Information	Displays the current monitor property settings.	• **Current Resolution** • **Optimum Resolution** (best with the monitor) • **Model Name**
Reset All	Resets all mode, color and geometry settings to the factory default values.	• **YES** • **NO**

Troubleshooting

Frequently asked questions (FAQ)

Imaging

The image is blurred.

- Download **Resolution** file from the website (see Product support on page 3). Refer to "**Adjusting the Screen Resolution**". And then select the correct resolution, refresh rate and make adjustments based on these instructions.
- If a VGA extension cable is used, remove the extension cable for the test. Is the image now in focus? Download **Resolution** file from the website (see Product support on page 3). Refer to "**Adjusting the Screen Resolution**". And then select the correct resolution, refresh rate and make adjustments based on these instructions to optimize the image. It is normal for blurring to occur due to conduction losses in extension cables. You can minimize these losses by using an extension cable with better conduction quality or with a built-in booster.

Does the blurring only occur at resolutions lower than the native (maximum) resolution?

Download **Resolution** file from the website (see Product support on page 3). Refer to "**Adjusting the Screen Resolution**". Select the native resolution.

Pixel errors can be seen.

One of several pixels is permanently black, one or more pixels are permanently white, one or more pixels are permanently red, green, blue or another color.

- Clean the LCD screen.
- Cycle power on-off.
- These are pixels that are permanently on or off and is a natural defect that occurs in LCD technology.

The image has a faulty coloration.

It has a yellow, blue or pink appearance.

Go to **Color** and **Reset Color**, and then choose **YES** to reset the color settings to the factory defaults.

If the image is still not correct and the OSD also has faulty coloration, this means one of the three primary colors is missing in the signal input. Now check the signal cable connectors. If any pin is bent or broken off, please contact your dealer to get necessary support.

The image is distorted, flashes or flickers.

Download **Resolution** file from the website (see Product support on page 3). Refer to "**Adjusting the Screen Resolution**". And then select the correct resolution, refresh rate and make adjustments based on these instructions.

You are running the monitor at its native resolution, but the image is still distorted.

Images from different input sources may appear distorted or stretched on the monitor running at its native resolution. To have the optimal display performance of each type of input sources, you can use the **Display Mode** function to set a proper aspect ratio for the input sources. See Display Mode on page 59 for details.

The image is displaced in one direction.

Download **Resolution** file from the website (see Product support on page 3). Refer to "**Adjusting the Screen Resolution**". And then select the correct resolution, refresh rate and make adjustments based on these instructions.

Faint shadow from the static image displayed is visible on the screen.

- Activate the power management function to let your computer and monitor go into a low power "sleep" mode when not actively in use.
- Use a screensaver to prevent the occurrence of image retention.

Power LED indicator

The LED indicator is white or orange.

- If the LED lights up in solid white, the monitor is powered on.
- If the LED is illuminated in white and there is a message **Out of Range** on the screen, this means you are using a display mode that this monitor does not support, please change the setting to one of the supported mode. Download **Resolution** file from the website (see Product support on page 3). Refer to "**Adjusting the Screen Resolution**". And then select the correct resolution, refresh rate and make adjustments based on these instructions.
- If the LED is illuminated in orange, the power management mode is active. Press any button on the computer keyboard or move the mouse. If that does not help, check the signal cable connectors. If any pin is bent or broken off, please contact your dealer to get necessary support.
- If the LED is off, check the power supply mains socket, the external power supply and the mains switch.

OSD controls

The OSD controls are inaccessible.

To unlock the OSD controls when it is preset to be locked, press and hold any key for 5 seconds.

OSD messages

A message **Out of Range** on the screen during computer boot up process.

If there is a message **Out of Range** on the screen during computer boot up process, this means computer compatibility caused by operating system or graphic card. The system will adjust the refresh rate automatically. Just wait until the operating system is launched.

Audio

No sound can be heard from the built-in speakers.

- Check whether the desired cable to input audio signals is properly connected. See Connect the headphone. on page 22 for details.
- Increase the volume (volume may be muted or too low).
- Remove your headphone and/or external speakers. (If they are connected to the monitor, the built-in speakers are automatically muted.)

Sound from the built-in speakers is low or unclear.

- Increase the volume (volume may be too low).
- Make sure the Noise Filter function of the built-in speakers is disabled. This function is not recommended for music or movie playback. To disable the Noise Filter function, press the Noise Filter Speaker key and select **OFF** from the hotkey menu.

No sound can be heard from the connected external speakers.

- Remove your headphone (if the headphone is connected to the monitor).
- Check whether the headphone jack is properly connected.
- If the external speakers are USB-powered, check whether the USB connection is OK.
- Increase the volume (volume may be muted or too low) on the external speakers.

(Selected models only) The built-in microphone does not respond when the monitor is connected to a PC.

- (Models with USB-C™) Check if the certified USB-C™ cable with signal transmission and power delivery functions is properly connected.
- Turn on the microphone by pressing the MIC key. See The control panel on page 36 for the location of the key.
- Increase the MIC volume from the **Audio** menu. See Audio menu on page 55 for more information.

Sensors (selected models only)

The light sensor of the monitor does not work well.

The light sensor is located at the front bottom of the monitor. Please check:

- If you have removed the sensor protection sticker.
- If the Brightness Intelligence Gen2 function is set to **ON**. Check **Eye Care** > **B.I. Gen2**.
- If there are any obstacles in front of the sensor that keep the sensor from detecting the light properly.
- If there are any objects or clothing in bright colors in front of the sensor. Bright colors (especially white and fluorescent colors) reflect light and the sensor cannot detect the main light sources.

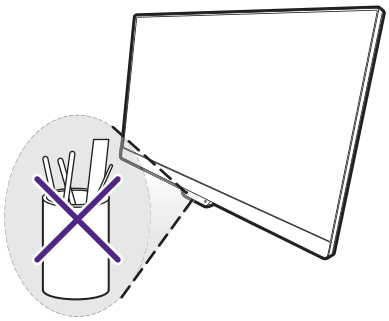

MST connection (models with DisplayPort outputs only)

The MST function does not work.

Make sure **ON** is selected under **System** > **MST**.

- Make sure the graphic card on your computer supports DP 1.4 for MST.
- The compatibility of each computer varies by hardware and/or software. You may need to go through all the cables, specifications and settings to ensure that your system supports MST. If your computer is a Mac, try with a Windows system. MST is available on a Mac OS via Thunderbolt connection only.

USB-C™ connection (models with USB-C™)

No video or audio output from the laptop with USB-C™ connection.

Check the cable connections and menu settings in the following order.

- Check if the USB-C™ cable has been connected to the monitor and the laptop properly. See Connect the PC video cable on page 22 for more information.
- Check if the input source has been selected to **USB-C** from **Input**.

Need more help?

If your problems remain after checking this manual, please contact your place of purchase or visit the local website from Support.BenQ.com for more support and local customer service.