5

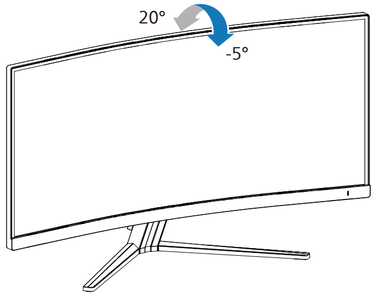

Adjust your settings with the EVNIA Precision Center Software

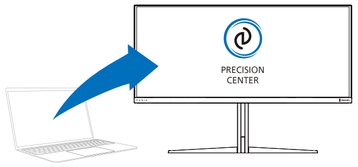

Register your product and get support at
www.philips.com/support

FAQ

PRECISION CENTER

User Manual

2025 © TOP Victory Investments Ltd. All rights reserved.

This product has been manufactured by and is sold under the responsibility of Top Victory Investments Ltd., and Top Victory Investments Ltd. is the warrantor in relation to this product. Philips and the Philips Shield Emblem are registered trademarks of Koninklijke Philips N.V. and are used under license.

Specifications are subject to change without notice.

The terms HDMI, HDMI High-Definition Multimedia Interface, HDMI Trade Dress and the HDMI Logos are trademarks or registered trademarks of HDMI Licensing Administrator, Inc.

www.evnia.philips

Energy Labelling
34M2C3500L

Printed in China

H41G78S581382A

EVNIA

34M2C3500L

Quick Start

ADJUST YOUR SETTINGS WITH EVNIA PRECISION CENTER

Register your product and get support at **www.philips.com/welcome**

PHILIPS

Contents

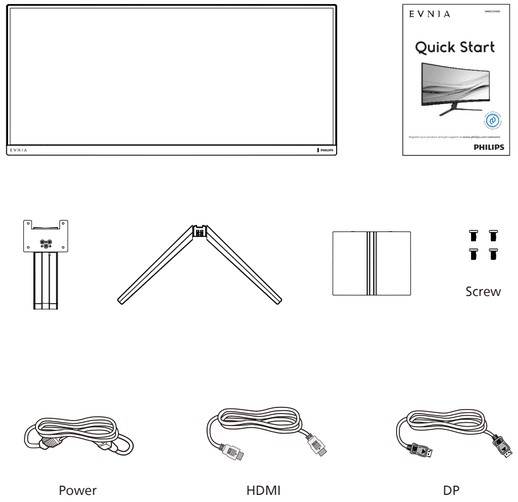

en The images shown are for illustrative purposes only. Actual product and accessory may vary by country or regions. Actual product and accessory shall prevail in kind.

fr Les images sont uniquement fournies à des fins d'illustration. Le produit et les accessoires actuels peuvent différer selon le pays ou la région. Le produit et les accessoires réels prévaudront dans tous les cas.

es Las imágenes que se muestran son solo de carácter ilustrativo. El producto y los accesorios reales pueden variar según el país o las regiones. El producto real y el accesorio prevalecerán en especie.

sc 所有插图和产品配件仅为示意参考。因销售区域差异，产品可能不含有以上配件，具体以实物为准。

jp 表示されている画像は説明のみを目的としています。実際の付属品は国や地域によって異なる場合がございます。

ko 표시된 이미지는 이해를 돕기 위한 것으로 실제 제품 및 액세서리는 국가 또는 지역에 따라 다를 수 있습니다. 실제 제품 및 동봉된 액세서리를 확인하세요.

1

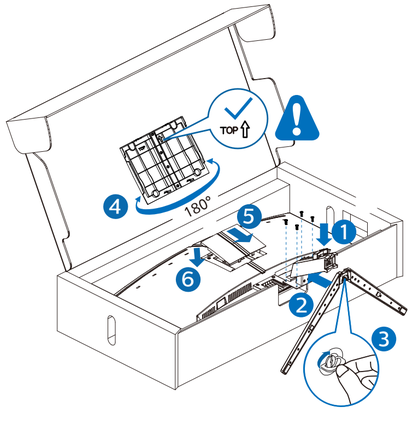

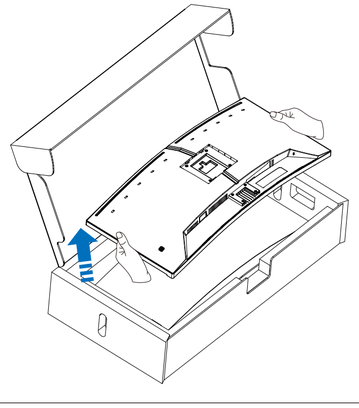

2

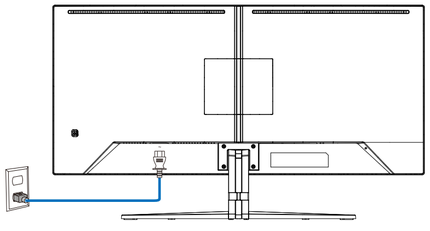

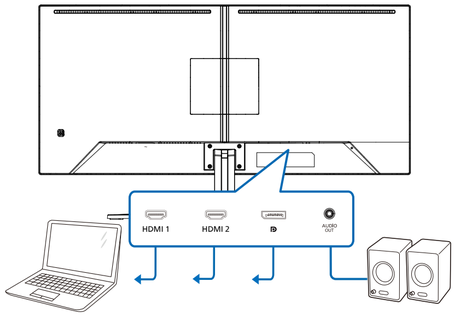

3

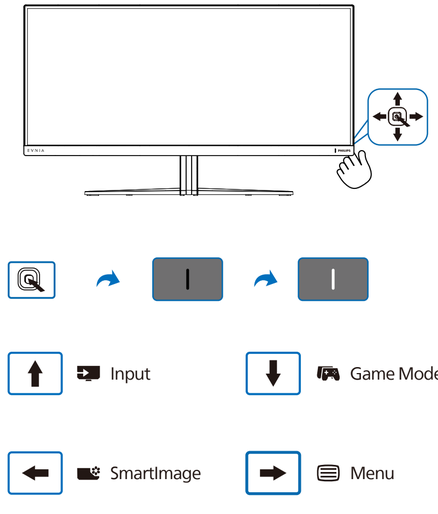

4

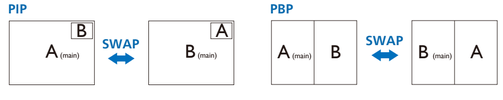

MultiView		SUB SOURCE POSSIBILITY (xl)		
	Inputs	HDMI 1	HDMI 2	DisplayPort
MAIN SOURCE (xl)	HDMI 1	●	●	●
	HDMI 2	●	●	●
	DisplayPort	●	●	●